US009927621B2

(12) **United States Patent**
Honea et al.

(10) **Patent No.: US 9,927,621 B2**
(45) **Date of Patent: Mar. 27, 2018**

(54) **METHOD AND APPARATUS FOR FIBER-LASER OUTPUT-BEAM SHAPING FOR BEAM COMBINATION**

(71) Applicant: **Lockheed Martin Corporation**, Bethesda, MD (US)

(72) Inventors: **Eric C. Honea**, Seattle, WA (US); **Yongdan Hu**, Bothell, WA (US)

(73) Assignee: **Lockheed Martin Corporation**, Bethesda, MD (US)

(*) Notice: Subject to any disclaimer, the term of this patent is extended or adjusted under 35 U.S.C. 154(b) by 0 days.

(21) Appl. No.: **15/182,565**

(22) Filed: **Jun. 14, 2016**

(65) **Prior Publication Data**

US 2017/0068097 A1 Mar. 9, 2017

Related U.S. Application Data

(62) Division of application No. 13/987,265, filed on Feb. 18, 2014, now Pat. No. 9,366,872.

(51) **Int. Cl.**
G02B 27/10 (2006.01)
G02B 27/09 (2006.01)
(Continued)

(52) **U.S. Cl.**
CPC ***G02B 27/0927*** (2013.01); ***G02B 5/001*** (2013.01); ***G02B 19/0023*** (2013.01);
(Continued)

(58) **Field of Classification Search**
CPC G02B 27/0927; G02B 27/09; G02B 27/0905; G02B 27/0916; G02B 27/0922;
(Continued)

(56) **References Cited**

U.S. PATENT DOCUMENTS

3,728,117 A 4/1973 Heidenhain et al.
4,200,846 A 4/1980 Stark et al.
(Continued)

FOREIGN PATENT DOCUMENTS

EP 1458067 9/2004
EP 1482609 12/2004
(Continued)

OTHER PUBLICATIONS

Augst, S.J., et al., "Wavelength beam combining of ytterbium fiber lasers", "Opt. Lett.", 2003, pp. 331-333, vol. 28, No. 5.
(Continued)

Primary Examiner — Joseph P Martinez
(74) *Attorney, Agent, or Firm* — Charles A. Lemaire; Jonathan M. Rixen; Lemaire Patent Law Firm, P.L.L.C.

(57) **ABSTRACT**

A method and apparatus for combining a plurality of laser beamlets to form a single annular beam using spectral beam combination. This invention includes a plurality of laser sources that emit a plurality of beamlets, wherein each one of the plurality of beamlets has a different wavelength; a beam annularizer that includes a plurality of optical units arranged to receive the beamlets, and configured to convert each beamlet into a respective annular beam that has an annular cross-sectional power profile; a beam-intersection transform element configured to point each respective one of the plurality of annular beams in an angular intersection arrangement toward a first location; and a spectral beam combiner at the first location configured to combine the plurality of wavelengths in the plurality of annular beams into a first annular spectrally combined beam.

20 Claims, 16 Drawing Sheets

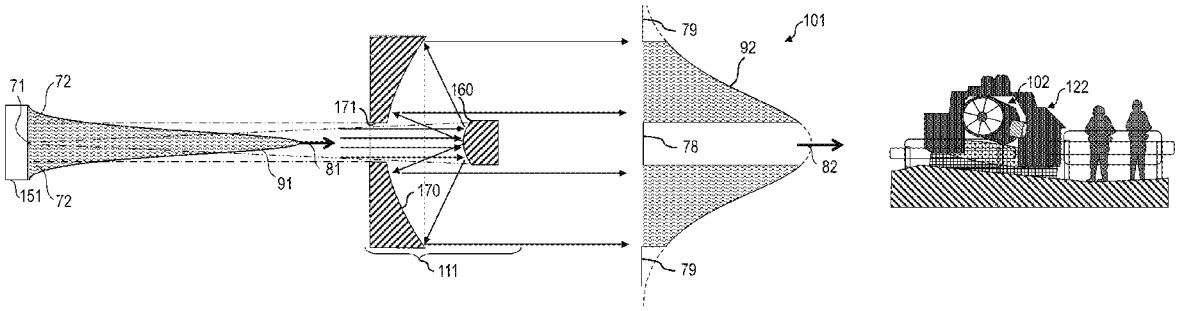

(51) **Int. Cl.**

G02B 27/30	(2006.01)
G02B 19/00	(2006.01)
G02B 5/00	(2006.01)
H01S 3/067	(2006.01)
H01S 3/23	(2006.01)
H01S 3/00	(2006.01)

(52) **U.S. Cl.**

CPC ***G02B 19/0047*** (2013.01); ***G02B 27/0905*** (2013.01); ***G02B 27/0944*** (2013.01); ***G02B 27/1006*** (2013.01); ***G02B 27/1086*** (2013.01); ***G02B 27/30*** (2013.01); ***H01S 3/005*** (2013.01); ***H01S 3/067*** (2013.01); ***H01S 3/2391*** (2013.01)

(58) **Field of Classification Search**

CPC G02B 27/30; G02B 27/10; G02B 27/1006; G02B 27/1086; G02B 27/0944; G02B 19/00; G02B 19/0047; G02B 19/0057

See application file for complete search history.

(56) **References Cited**

U.S. PATENT DOCUMENTS

4,278,902	A	7/1981	Loy et al.
4,313,648	A	2/1982	Yano et al.
4,367,040	A	1/1983	Goto
4,424,435	A	1/1984	Barnes, Jr.
4,523,315	A	6/1985	Stone
4,655,592	A	4/1987	Allemand
4,794,345	A	12/1988	Linford et al.
4,813,762	A	3/1989	Leger et al.
4,862,257	A	8/1989	Ulich
4,895,790	A	1/1990	Swanson et al.
5,052,780	A	10/1991	Klein
5,243,448	A	9/1993	Banbury
5,319,668	A	6/1994	Luecke
5,323,404	A	6/1994	Grubb
5,379,310	A	1/1995	Papen et al.
5,440,416	A	8/1995	Cohen et al.
5,454,004	A	9/1995	Leger et al.
5,526,155	A	6/1996	Knox et al.
5,608,826	A	3/1997	Boord et al.
5,642,447	A	6/1997	Pan et al.
5,661,835	A	8/1997	Kato et al.
5,802,236	A	9/1998	DiGiovanni et al.
5,815,518	A	9/1998	Reed et al.
5,818,630	A	10/1998	Fermann et al.
5,838,700	A	11/1998	Dianov et al.
5,847,863	A	12/1998	Galvanauskas et al.
5,867,305	A	2/1999	Waarts et al.
5,907,436	A	5/1999	Perry et al.
5,912,910	A	6/1999	Sanders et al.
5,930,030	A	7/1999	Scifres
5,974,060	A	10/1999	Byren et al.
6,014,249	A	1/2000	Fermann et al.
6,023,361	A	2/2000	Ford
6,028,879	A	2/2000	Ershov
6,031,952	A	2/2000	Lee
6,053,640	A	4/2000	Miyokawa et al.
6,061,170	A	5/2000	Rice et al.
6,072,931	A	6/2000	Yoon et al.
6,081,635	A	6/2000	Hehmann
6,097,863	A	8/2000	Chowdhury
6,163,552	A	12/2000	Engelberth et al.
6,163,554	A	12/2000	Chang et al.
6,181,465	B1	1/2001	Grubb et al.
6,192,062	B1	2/2001	Sanchez-Rubio et al.
6,208,679	B1	3/2001	Sanchez-Rubio et al.
6,212,310	B1	4/2001	Waarts et al.
6,226,077	B1	5/2001	Dunne
6,226,126	B1	5/2001	Conemac
6,275,623	B1	8/2001	Brophy et al.
6,295,304	B1	9/2001	Koch et al.
6,301,271	B1	10/2001	Sanders et al.
6,310,899	B1	10/2001	Jacobvitz-Veselka et al.
6,327,292	B1	12/2001	Sanchez-Rubio et al.
6,330,523	B1	12/2001	Kacyra et al.
6,339,662	B1	1/2002	Koteles et al.
6,381,008	B1	4/2002	Branagh et al.
6,381,388	B1	4/2002	Epworth et al.
6,400,495	B1	6/2002	Zayhowski
6,407,855	B1	6/2002	MacCormack et al.
6,418,152	B1	7/2002	Davis
6,426,965	B1	7/2002	Chang et al.
6,434,172	B1	8/2002	DiGiovanni et al.
6,456,756	B1	9/2002	Mead
6,496,301	B1	12/2002	Koplow et al.
6,501,782	B1	12/2002	Farmer
6,584,133	B1	6/2003	Walker et al.
6,603,912	B2	8/2003	Birks
6,625,180	B2	9/2003	Bufetov et al.
6,625,364	B2	9/2003	Johnson et al.
6,631,234	B1	10/2003	Russell et al.
6,654,522	B2	11/2003	Chandalia et al.
6,665,471	B1	12/2003	Farmer et al.
6,696,142	B2	2/2004	Baer et al.
6,697,192	B1	2/2004	Fan et al.
6,717,655	B2	4/2004	Cheng et al.
6,754,006	B2	6/2004	Barton et al.
6,765,724	B1	7/2004	Kramer
6,775,057	B2	8/2004	Akasaka et al.
6,798,960	B2	9/2004	Hamada
6,807,338	B2	10/2004	Bouteiller et al.
6,819,871	B1	11/2004	Baldwin et al.
6,822,796	B2	11/2004	Takada et al.
6,829,421	B2	12/2004	Forbes et al.
6,830,813	B2	12/2004	Ravi
6,836,607	B2	12/2004	Dejneka et al.
6,845,108	B1	1/2005	Liu et al.
6,845,204	B1	1/2005	Broeng et al.
6,865,344	B1	3/2005	Johnson et al.
6,868,099	B1	3/2005	Walker et al.
6,882,431	B2	4/2005	Teich et al.
6,882,467	B1	4/2005	Emori et al.
6,882,468	B2	4/2005	Emori et al.
6,898,339	B2	5/2005	Shah et al.
6,901,197	B2	5/2005	Hasegawa et al.
6,914,916	B2	7/2005	Pezeshki et al.
6,917,466	B2	7/2005	Namiki et al.
6,917,631	B2	7/2005	Richardson et al.
6,937,795	B2	8/2005	Squires et al.
6,950,692	B2	9/2005	Gelikonov et al.
6,952,510	B1	10/2005	Karlsen et al.
6,958,859	B2	10/2005	Hoose et al.
6,959,021	B2	10/2005	Po et al.
6,959,130	B2	10/2005	Fauver et al.
6,960,027	B1	11/2005	Krah et al.
6,961,356	B2	11/2005	Brown
6,963,354	B1	11/2005	Scheps
6,965,469	B2	11/2005	Avizonis et al.
6,996,343	B2	2/2006	Neilson
7,043,127	B2	5/2006	Hasegawa et al.
7,050,221	B2	5/2006	Emori et al.
7,065,107	B2	6/2006	Hamilton et al.
7,072,369	B2	7/2006	Matsushita et al.
7,072,553	B2	7/2006	Johnson et al.
7,106,932	B2	9/2006	Birks et al.
7,113,327	B2	9/2006	Gu et al.
7,113,524	B2	9/2006	Bonaccini et al.
7,116,469	B2	10/2006	Bragheri et al.
7,128,943	B1	10/2006	Djeu
7,136,559	B2	11/2006	Yusoff et al.
7,142,757	B1	11/2006	Ward
7,167,300	B2	1/2007	Fermann et al.
7,190,705	B2	3/2007	Fermann et al.
7,199,919	B2	4/2007	Emori et al.
7,199,924	B1	4/2007	Brown et al.
7,206,123	B2	4/2007	Emori et al.
7,221,822	B2	5/2007	Grudinin et al.
7,227,814	B2	6/2007	Frederick et al.
7,233,442	B1	6/2007	Brown et al.
7,242,835	B2	7/2007	Busse et al.
7,248,399	B2	7/2007	Taniguchi et al.

(56) **References Cited**

U.S. PATENT DOCUMENTS

7,259,906	B1	8/2007	Islam	
7,280,730	B2	10/2007	Dong et al.	
7,340,140	B1	3/2008	Xu et al.	
7,349,589	B2	3/2008	Temelkuran et al.	
7,349,611	B2	3/2008	Broeng et al.	
7,362,497	B2	4/2008	Hodder et al.	
7,375,877	B1	5/2008	Di Teodoro et al.	
7,376,312	B2	5/2008	Nawae et al.	
7,376,315	B2	5/2008	Kurosawa et al.	
7,391,561	B2	6/2008	Di Teodoro et al.	
7,400,442	B2	7/2008	Matsushita et al.	
7,414,780	B2	8/2008	Fermann et al.	
7,424,193	B2	9/2008	Galvanauskas	
7,433,116	B1	10/2008	Islam	
7,436,588	B2	10/2008	Rothenberg et al.	
7,437,046	B2	10/2008	DiGiovanni et al.	
7,440,167	B2	10/2008	Taniguchi et al.	
7,446,315	B1	11/2008	Tidwell	
7,447,444	B2	11/2008	Igarashi et al.	
7,471,705	B2	12/2008	Gerstenberger et al.	
7,477,666	B2	1/2009	Liu	
7,501,330	B2	3/2009	Ravi et al.	
7,508,853	B2	3/2009	Harter et al.	
7,519,253	B2	4/2009	Islam	
7,532,656	B2	5/2009	Yang et al.	
7,535,631	B2	5/2009	Brown et al.	
7,548,368	B2	6/2009	Akasaka et al.	
7,576,909	B2	8/2009	Harter et al.	
7,590,323	B2	9/2009	Broeng et al.	
7,620,077	B2	11/2009	Henderson	
7,671,337	B1	3/2010	Tidwell	
7,692,852	B2	4/2010	Akasaka et al.	
7,701,987	B1	4/2010	Savage-Leuchs et al.	
7,711,013	B2	5/2010	Liu et al.	
7,768,700	B1	8/2010	Savage-Leuchs	
7,782,912	B2	8/2010	Harter et al.	
7,787,729	B2	8/2010	Dong et al.	
7,835,608	B2	11/2010	Minelly et al.	
7,846,767	B1	12/2010	Sung	
7,872,794	B1	1/2011	Minelly et al.	
7,876,498	B1	1/2011	Honea et al.	
7,876,803	B1	1/2011	Di Teodoro et al.	
8,094,689	B1	1/2012	Koplow	
8,179,594	B1	5/2012	Tidwell	
8,199,399	B1	6/2012	Savage-Leuchs	
8,411,712	B2	4/2013	Honea et al.	
8,441,718	B2	5/2013	Mead	
8,472,763	B1	6/2013	Liu et al.	
8,493,651	B1	7/2013	Hu et al.	
8,503,840	B2	8/2013	Hu et al.	
8,526,110	B1	9/2013	Honea et al.	
8,755,649	B2	6/2014	Yilmaz et al.	
8,767,286	B2	7/2014	Savage-Leuchs	
8,830,568	B2	9/2014	Savage-Leuchs	
2002/0181856	A1	12/2002	Sappey et al.	
2003/0068150	A1	4/2003	Ariel et al.	
2004/0033043	A1	2/2004	Monro et al.	
2004/0076197	A1	4/2004	Clarkson	
2004/0240038	A1	12/2004	Kado et al.	
2005/0041702	A1	2/2005	Fermann et al.	
2005/0169590	A1	8/2005	Alkeskjold	
2006/0028374	A1	2/2006	Fullerton	
2006/0067632	A1	3/2006	Broeng et al.	
2006/0204190	A1	9/2006	Ranka et al.	
2006/0233554	A1	10/2006	Ramachandran et al.	
2007/0024959	A1	2/2007	Peterson	
2007/0229939	A1*	10/2007	Brown	G02B 27/1006 359/341.1
2008/0077200	A1	3/2008	Bendett et al.	

FOREIGN PATENT DOCUMENTS

WO	WO-2000049436	8/2000
WO	WO-2000060388	10/2000
WO	WO-2001065647 A2	9/2001
WO	WO-2013062584	5/2013

OTHER PUBLICATIONS

Blaze Photonics (Crystal Fibre Company), "HC-580-01 'yellow'—Hollow Core Photonic Bandgap Fiber (product description)", "http://www.crystal-fibre.com/datasheets/HC-580-01.pdf", Feb. 10, 2006.

Blaze Photonics (Crystal Fibre Company), "HC-580-01 'yellow' Hollow Core Photonic Bandgap Fiber", "http://www.crystal-fibre.com/datasheets/HC-580-01.pdf", Feb. 10, 2006.

Blazephotonics (Company), "High NA Multirnode Fiber MM-37-01 Product Description", "http://www.crystal-fibre.com/datasheets/MM-37-01.pdf", 2005.

Brooks, Christopher D, et al. , "1-mJ energy, 1-MW peak-power, 10-W averagepower, spectrally narrow, diffraction-limited pulses from a photonic-crystal f", "Optics Express", Oct. 31, 2005, pp. 8999-8002, vol. 13, No. 22.

Champert, P.A., et al., "3.5 W frequency-doubled fiber-based laser source at 772 nm", "Applied Physics Letters", Apr. 23, 2001, pp. 2420-2421, vol. 78, No. 17.

Chen et al., "Laser-to-Fiber Coupling Scheme by Utilizing a Lensed Fiber Integrated with a Long-Period Fiber Grating", "IEEE Photonics Technology Letters", May 2000, pp. 501-503, vol. 12, No. 5.

Cooper, L.J., et al., "High-power Yb-doped multicore ribbon fiber laser", Nov. 1, 2005, pp. 2906-2908, vol. 30, No. 21.

Crystal Fibre (Company), "High-Power Fiber Laser and Amplifier Subassembly Modules Product Description", "http://www.crystal-fibre.com/products/subassemblies.shtm", 2005 (copyright).

Crystal Fibre (Company), "Multimode Ultra High NA Photonic Crystal Fiber MM-HNA-110 Product Description","http://www.crystal-fibre.com/datasheets/MM-HNA-110.pdf", Apr. 2005.

Crystal Fibre (Company), "Multimode Ultra High NA Photonic Crystal Fiber MM-HNA-200 Product Description", "http://www.crystal-fibre.com/datasheets/MM-HNA-200.pdf", Apr. 2005.

Crystal Fibre (Company), "Multimode Ultra High NA Photonic Crystal Fiber MM-HNA-35 Product Description", "http://www.crystal-fibre.com/datasheets/MM-HNA-35.pdf", Apr. 2005.

Crystal Fibre (Company), "Multimode Ultra High NA Photonic Crystal Fiber MM-HNA-5 Product Description", "http://www.crystal-fibre.com/datasheets/MM-HNA-5.pdf", Apr. 2005.

Crystal Fibre (Company), "Towards 100 kW fiber laser systems Scaling up power in fiber lasers for beam combining", "http://www.crystal-fibre.com/support/White_Paper_-_Towards_100kW_fiber_laser_systems_-_Scaling_up_power_in_fiber_lasers_for_beam_combining.pdf", Feb. 28, 2006.

Davitt, Kristina, et al. , "290 and 340 nm UV LED arrays for fluorescence detection from single airborne particles", "Optics Express", Nov. 14, 2005, pp. 9548-9555, vol. 13, No. 23.

Di Teodoro, Fabio, et al. , "Diffraction-limited, 300-kW peak-power pulses from a coiled multimode fiber amplifier", "Optics Letters", Apr. 1, 2002, pp. 518-520, vol. 27, No. 7.

Di Teodoro, Fabio, et al. , "1.1 MW peak-power, 7 W average-power, high-spectral-brightness, diffraction-limited pulses from a photonic crystal fiber", "Optics Letters", Oct. 15, 2005, pp. 2694-2696, vol. 30, No. 20.

Di Teodoro, Fabio, et al. , "Harmonic generation of an Yb-doped photonic-crystal fiber amplifier to obtain 1ns pulses of 410, 160, and 190kW peak-pow", "Advanced Solid-State Photonics 29 Technical Digest, Paper ME3", Jan. 29, 2006.

Dunne, Mike , "Laser-driven particle accelerators", "Science", Apr. 21, 2006, pp. 374-376, vol. 312.

Emori, et al., "High-power Cascaded Raman Fiber Laser with 41-W output power at 1480-nm band", "Optical Society of America", May 2007, pp. 1-2.

(56) **References Cited**

OTHER PUBLICATIONS

Fan, T.Y., "Laser Beam Combining for High-Power, High Radiance Sources", "IEEE Journal of Selected Topics in Quantum Electronics", May/Jun. 2005, pp. 567-577, vol. 11.

Furusawa, et al., "Cladding pumped Ytterbium-doped fiber laser with holey inner and outer cladding.", "Optics Express", Dec. 17, 2001, pp. 714-720, vol. 9, No. 13.

Galvanauskas, Almantas, "Mode-scalable fiber-based chirped pulse amplification systems", "IEEE Journal on Selected Topics in Quantum Electronics", Jul. 2001, pp. 504-517, vol. 7, No. 4.

Galvanauskas, A., et al., "Fiber-laser-based ferntosecond parametric generator in bulk periodically poled LiNbO3", "Optics Letters", Jan. 15, 1997, pp. 105-107 , vol. 22, No. 2.

Hehl, Karl, et al., "High-efficiency dielectric reflection gratings: design, fabrication, and analysis", "Appl. Opt.", 1999, pp. 6257-6271, vol. 38.

Henderson, Angus, et al. , "Low threshold, singly-resonant CW OPO pumped by an all-fiber pump source", "Optics Express", Jan. 3, 2006, pp. 767-772, vol. 14, No. 2.

Kasinski, et al., "Near-diffraction-limited laser beam shaping with diamond-turned aspheric optics.", "Opt Lett.", 1997, pp. 1062-1065, vol. 22

Kennedy, et al., "Creation of Laguerre-Gaussian laser modes using diffractive optics", "Phys Rev A 66, 043801", 2002, pp. 043801-1 to 043801-5.

Krause, J.T., et al., "Arc Fusion Splices with Near Pristine Strengths and Improved Optical Loss", "22nd European Conference on Optical Communication", 1996, pp. 2.237-2.240.

Kristiansen, Rene E., et al., "Microstructured fibers and their applications", "Proceedings of the 4th Reunion Espanola of Optoelectronics (OPTOEL), CI-5", 2005, pp. 37-49.

Liem, A., et al., "100-W single-frequency master-oscillator fiber power amplifier", "Optics Letters", Sep. 1, 2003, pp. 1537-1539, vol. 28, No. 17.

Limpert, J., et al., "High power Q-switched Yb-doped photonic crystal fiber laser producing sub-10 ns pulses", "Appl. Phys. B 81", 2005, pp. 19-21.

Limpert, J., et al. "Low-nonlinearity single-transverse-mode ytterbium-doped photonic crystal fiber amplifier", "Optics Express", Apr. 5, 2004, pp. 1313-1319, vol. 12, No. 7.

Limpert, J., et al. , "High-power rod-type photonic crystal fiber laser", "Optics Express", Feb. 21, 2005, pp. 1055-1058, vol. 13, No. 4.

Liu, F., et al., "Cost-effective wavelength selectable light source using DFB fibre laser array", "Electronics Letters", Mar. 30, 2000, pp. 620-621, vol. 36, No. 7.

Liu, A., et al., "Spectral beam combining of high power fiber lasers", "Proceedings of SPIE", Jun. 7, 2004, pp. 81-88, vol. 5335.

Loftus, T.H., et al., "Spectrally Beam-Combined Fiber Lasers for High-Average-Power Applications", "IEEE Journal of Selected Topics in Quantum Electronics", May 1, 2007, pp. 487-497, vol. 13, No. 3.

Madasamy, P., et al., "Dual-Grating Spectral Beam Combination of High-Power Fiber Lasers", "IEEE Journal of Selected Topics in Quantum Electronics", Mar. 1, 2009, pp. 337-343, vol. 15, No. 2.

Mansell, Justin, "Clipping Loss for Square and Circular Gaussian and Super-Gaussian Beams through a Cassegrain Telescope Aperture", "downloaded Jul. 8, 2015 from http://www.activeopticalsystems.com/docs/AN028_Annular%20Clipping%20Loss.pdf", May 3, 2011, Publisher: Active Optical Systems, LLC.

Miguelez, et al., "Optical Segmentation Technology Alternative and Architectures", "Motorola", 2008, pp. 1-12.

Moutzouris, Konstantinos, et al. , "Highly efficient second, third and fourth harmonic generation from a two-branch femtosecond erbium fiber source", "Optics Express", Mar. 6, 2006, pp. 1905-1912, vol. 14, No. 5.

Perry, M.D., et al., "High-efficiency multilayer dielectric diffraction gratings", "Opt. Lett.", 1995, pp. 940-942, vol. 20.

Roser, F., et al. , "131 W 220 fs fiber laser system", "Optics Letters", Oct. 15, 2005, pp. 2754-2756, vol. 30, No. 20.

Schreiber, T., et al. , "Stress-induced single-polarization single-transverse mode photonic crystal fiber with low nonlinearity", "Optics Express", Sep. 19, 2005, pp. 7621-7630, vol. 13, No. 19.

"Sensor Systems for Biological Agent Attacks: Protecting Buildings and Military Bases", 2005, p. 73, Publisher: Committee on Materials and Manufacturing Processes for Advanced Sensors, National Research Council.

Sorensen, T., et al., "Metal-assisted coupling to hollow-core photonic crystal fibres", "Electronics Letters", Jun. 9, 2005, vol. 41, No. 12.

Sueda, et al., "Laguerre-Gaussian beam generated with a multilevel spiral phase plate for high intensity laser pulses", "Optics Express ", Jul. 26, 2004, pp. 3548-3553, vol. 12, No. 15.

Tunnermann, A., et al., "The renaissance and bright future of fibre lasers", "Journal of Physics B: Atomic, Molecular and Optical Physics", 2005, pp. S681-S693, vol. 38.

* cited by examiner

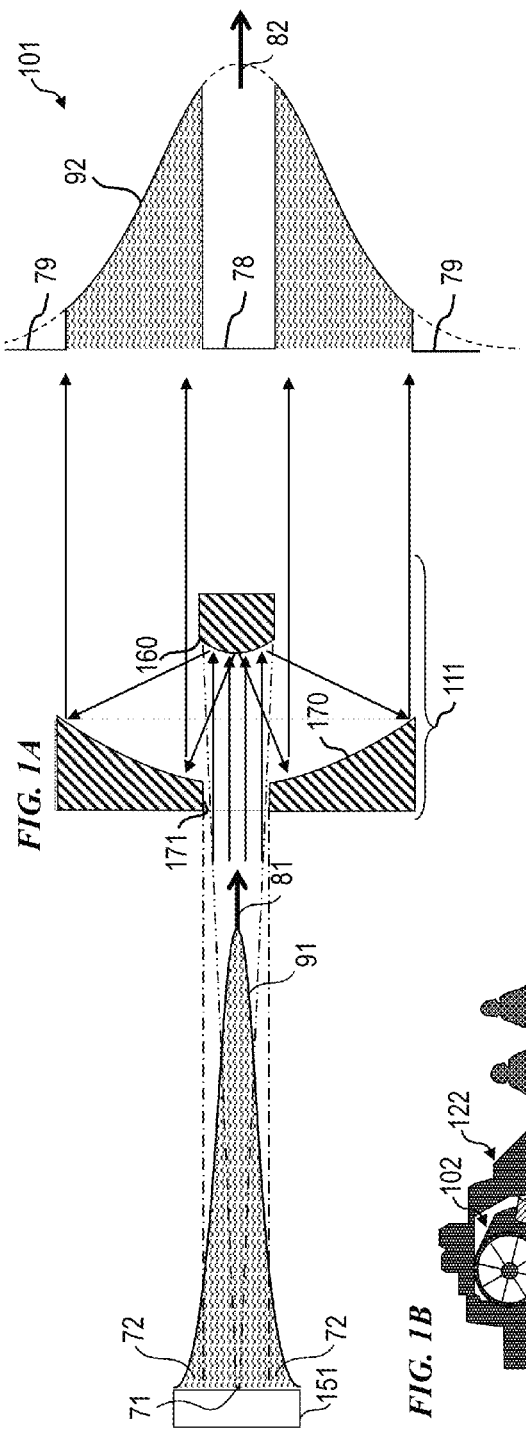

FIG. 1A

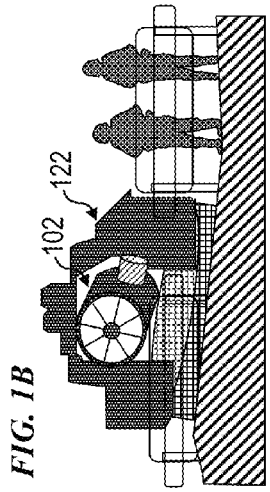

FIG. 1B

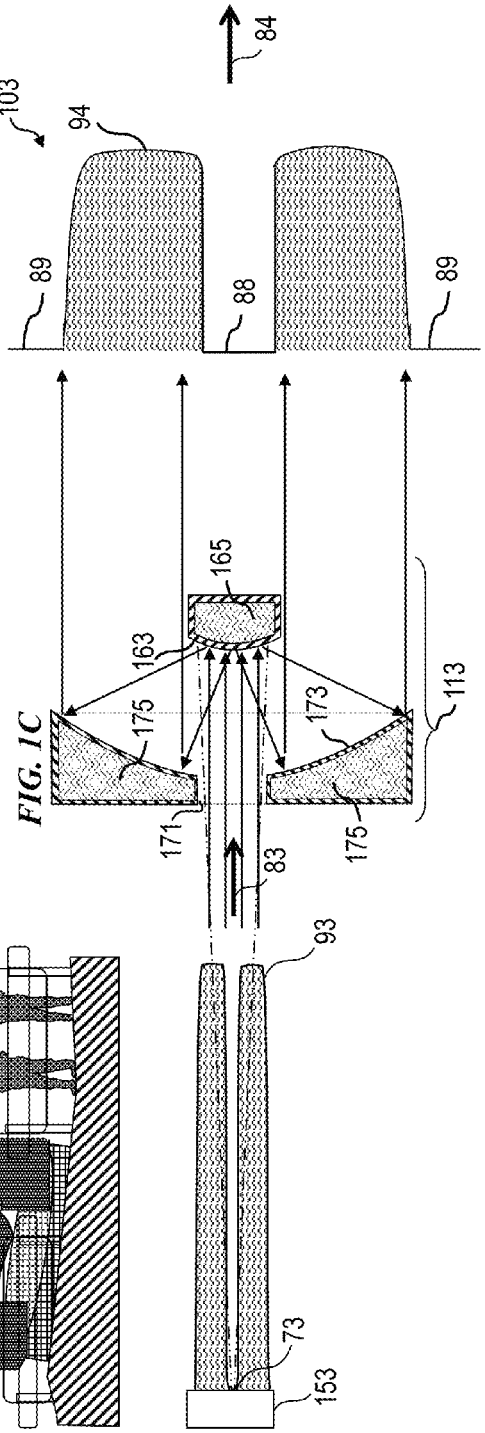

FIG. 1C

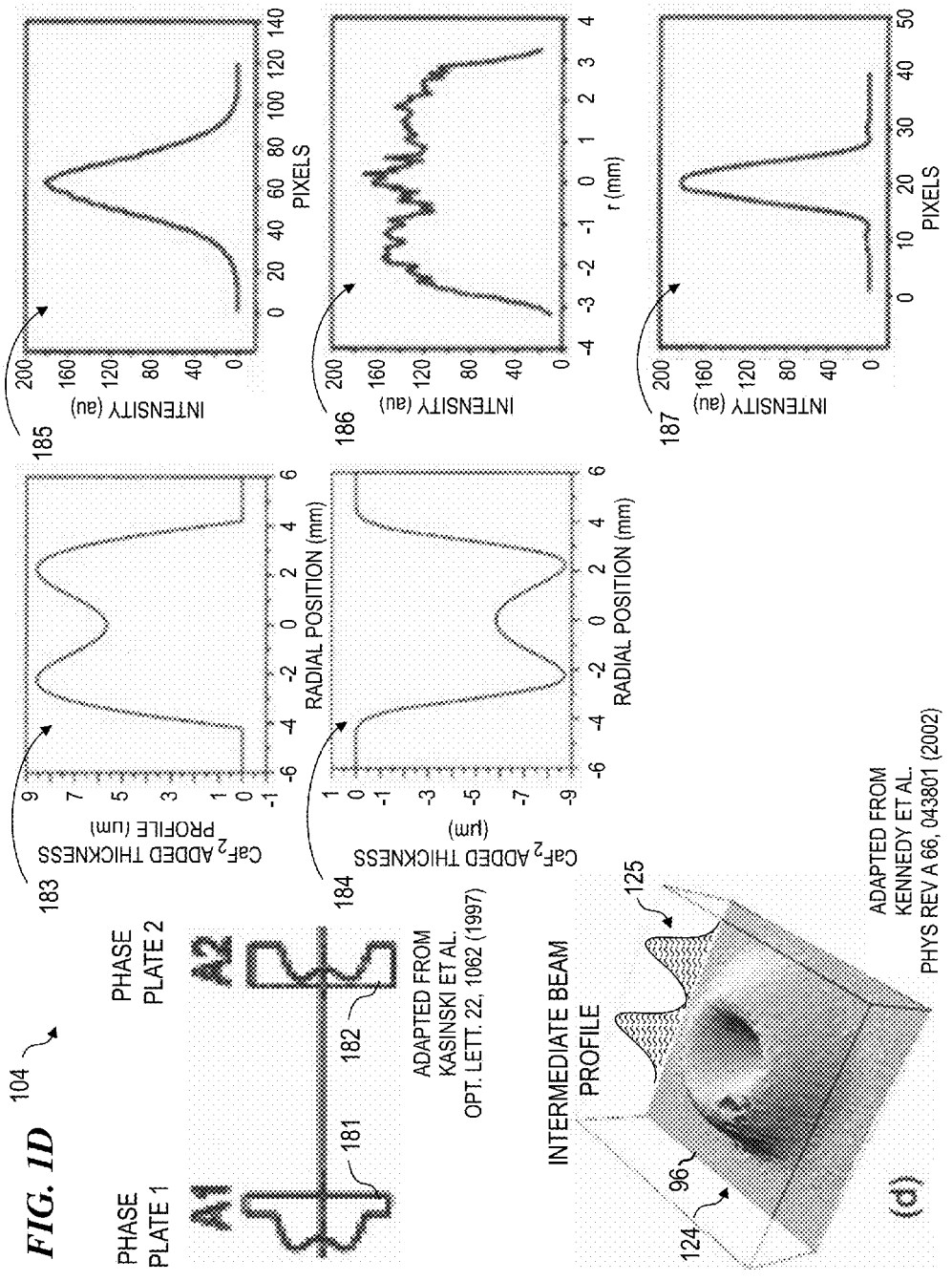
FIG. 1D
104
PHASE PLATE 1
PHASE PLATE 2
A1
A2
181
182
ADAPTED FROM KASINSKI ET AL. OPT. LETT. 22, 1062 (1997)
183
184
185
186
187
CaF2 ADDED THICKNESS PROFILE (um)
CaF2 ADDED THICKNESS (μm)
RADIAL POSITION (mm)
INTENSITY (au)
PIXELS
r (mm)
INTERMEDIATE BEAM PROFILE
96
124
125
(d)
ADAPTED FROM KENNEDY ET AL. PHYS REV A 66, 043801 (2002)

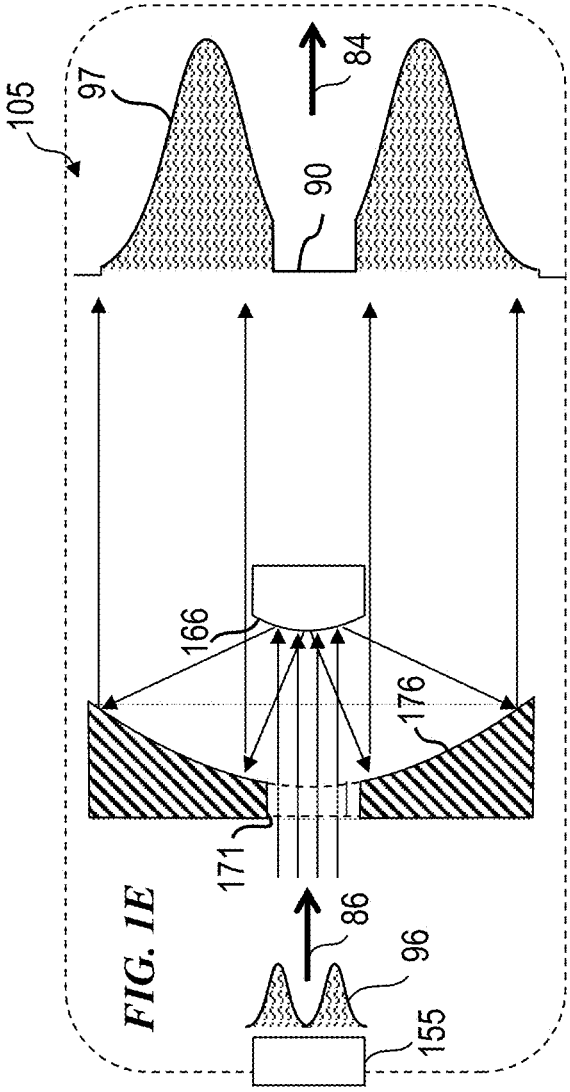

FIG. 1E

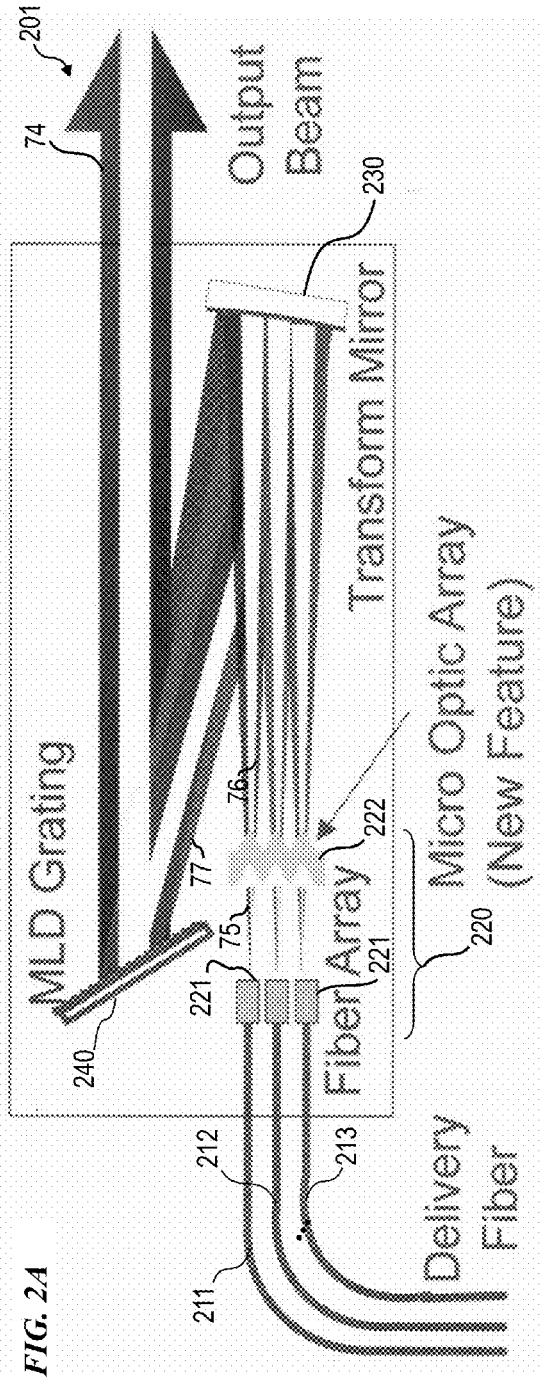
201
74
Output Beam
230
Transform Mirror
MLD Grating
240
76
77
75
221
Fiber Array
222
Micro Optic Array (New Feature)
220
212
213
211
Delivery Fiber

FIG. 2A

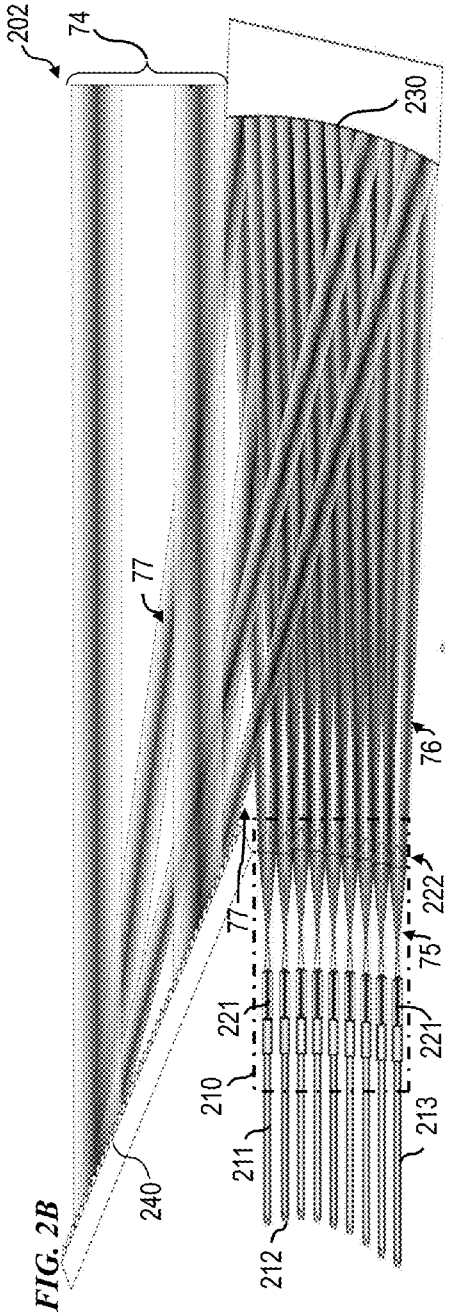
202
74
230
77
240
76
222
75
221
210
211
213
212

FIG. 2B

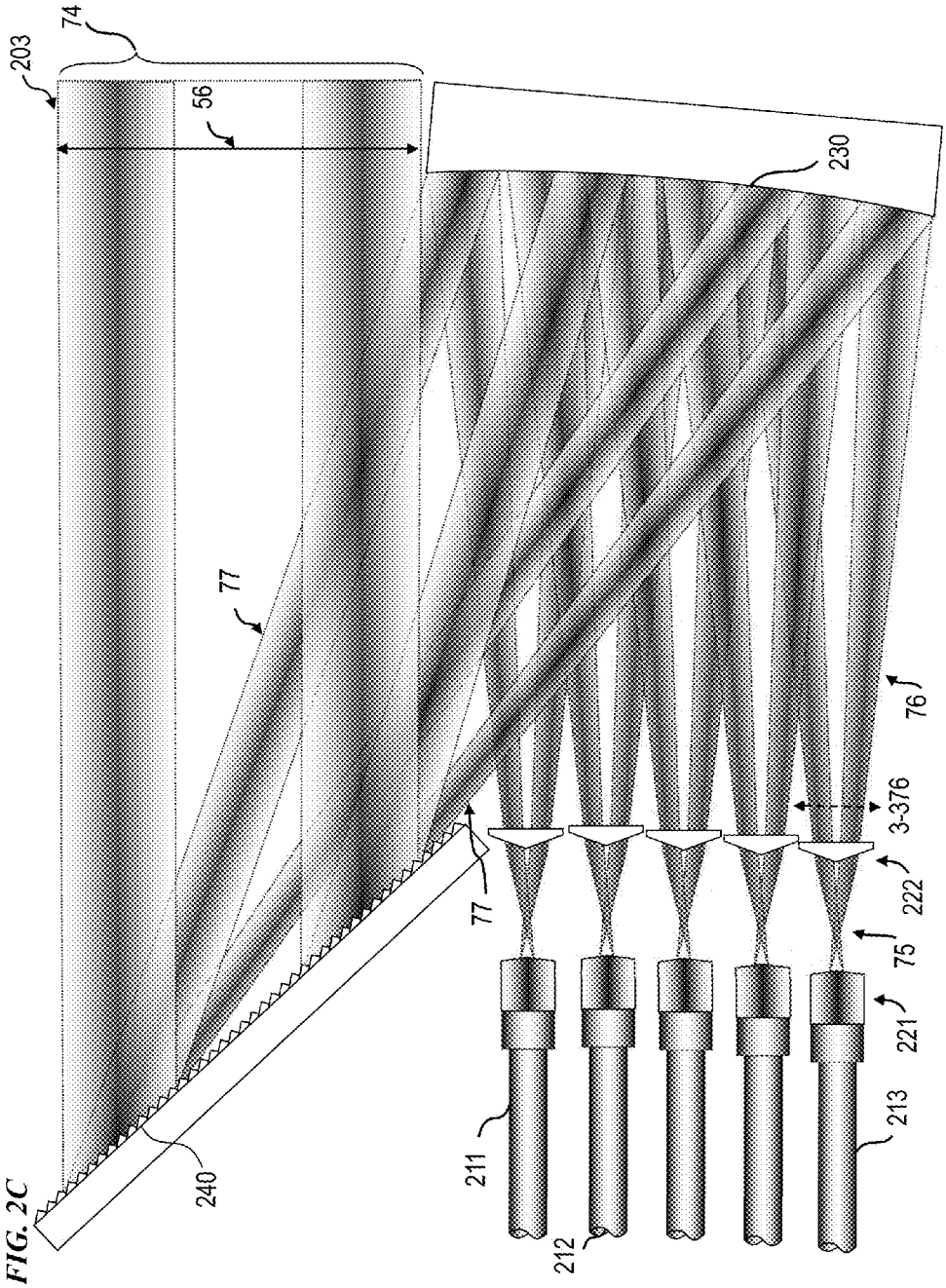

FIG. 2C

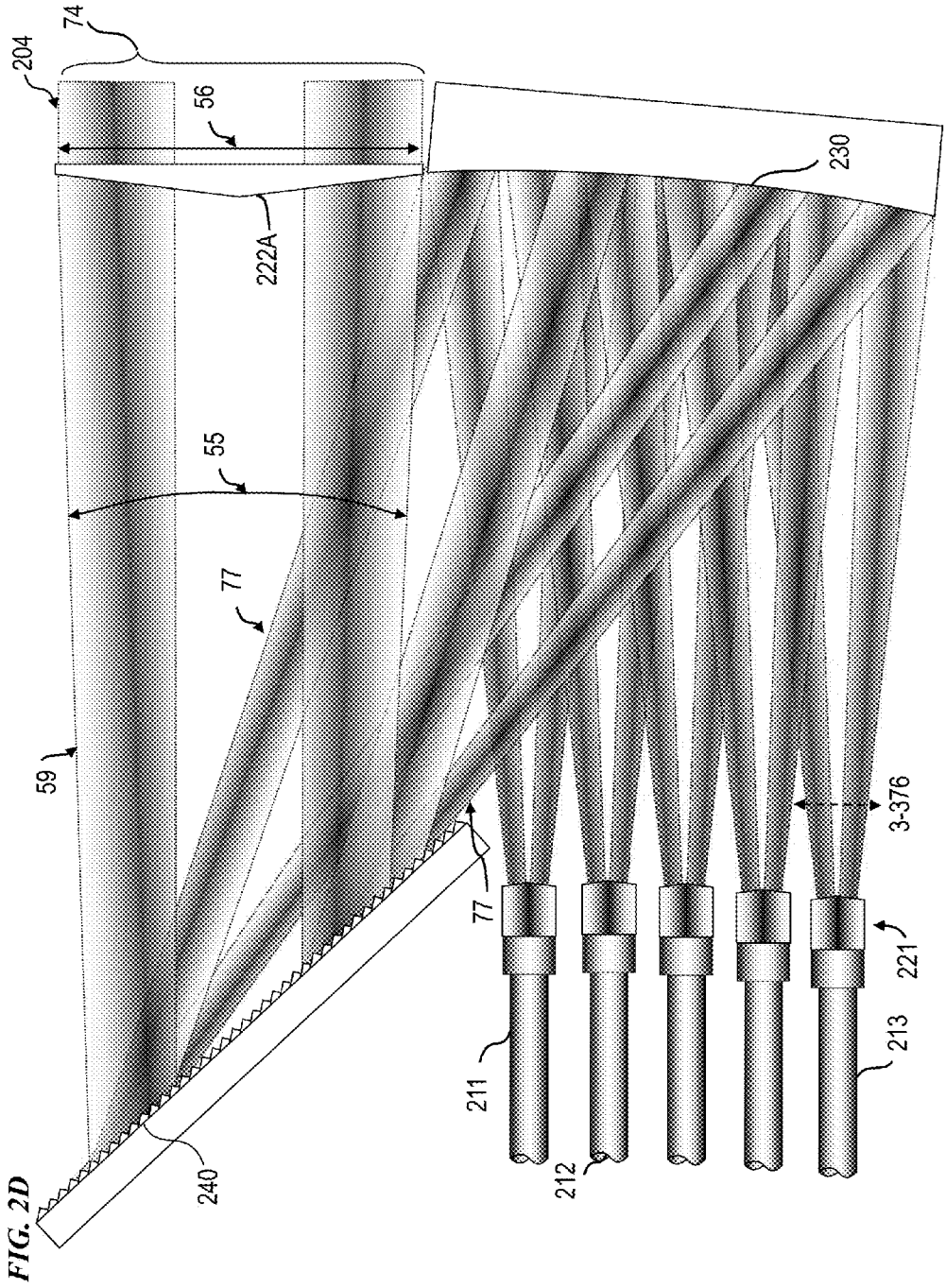

FIG. 2D

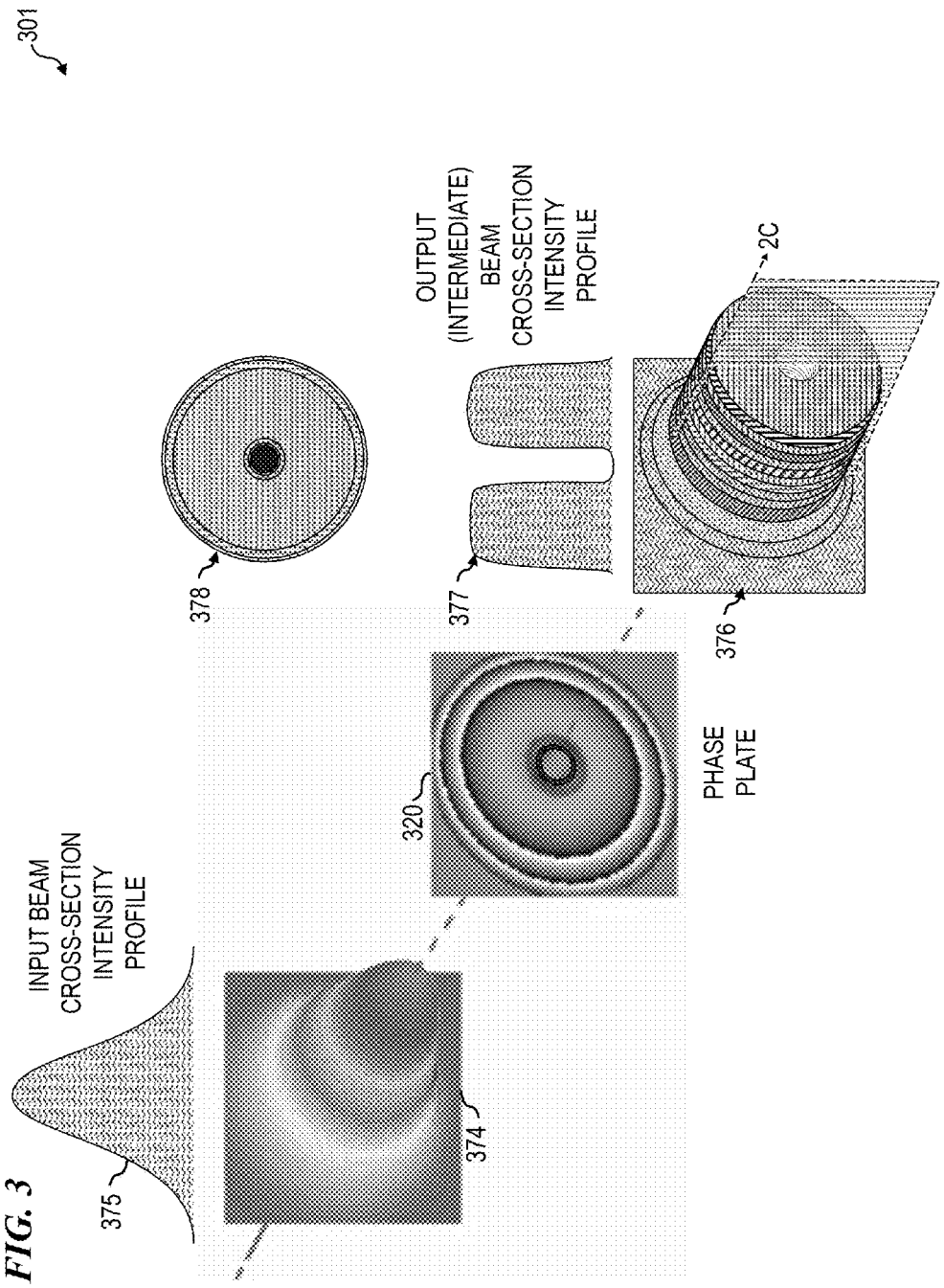
301
INPUT BEAM CROSS-SECTION INTENSITY PROFILE
375
374
320
PHASE PLATE
OUTPUT (INTERMEDIATE) BEAM CROSS-SECTION INTENSITY PROFILE
377
378
376
2C

FIG. 3

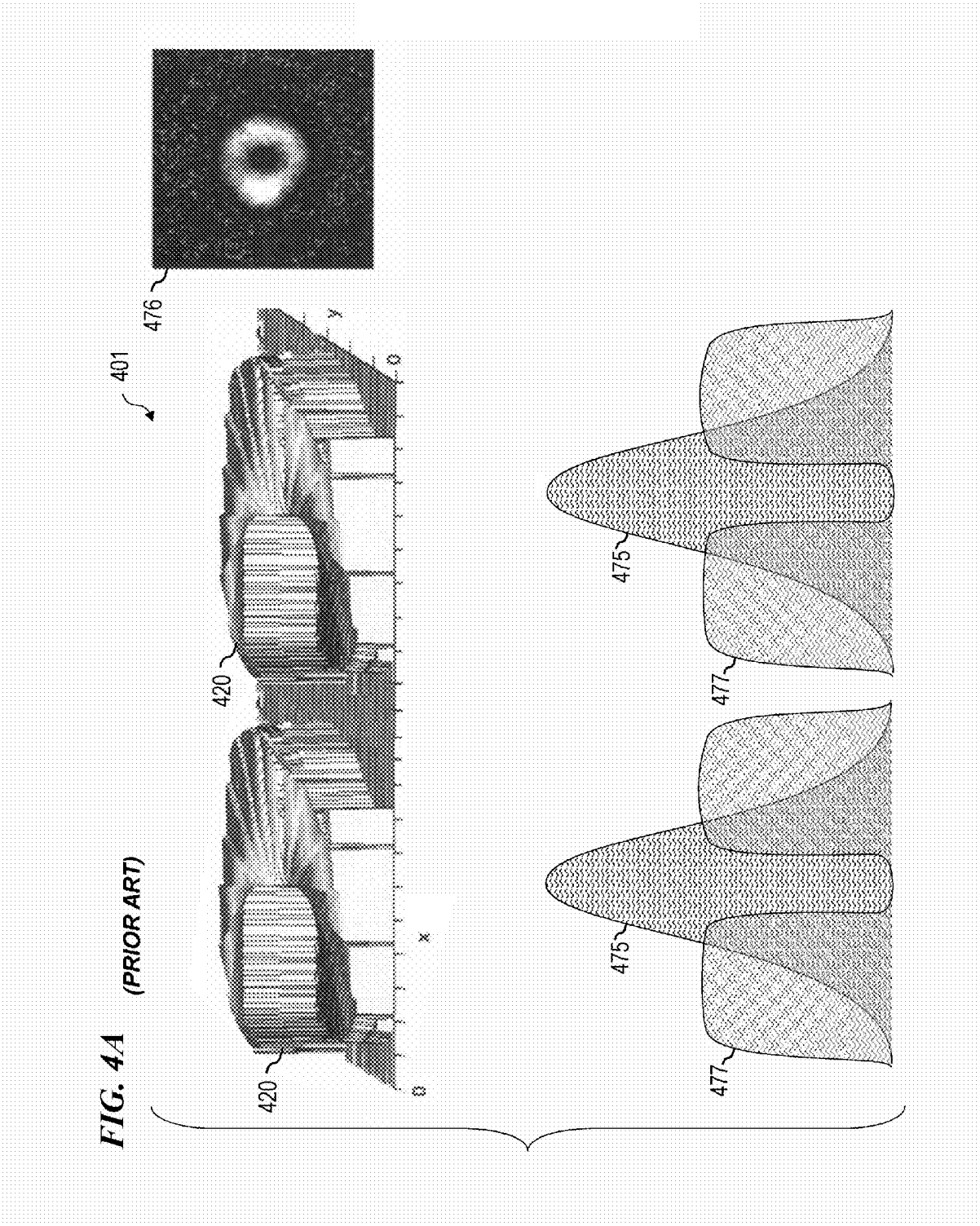

FIG. 4A (PRIOR ART)

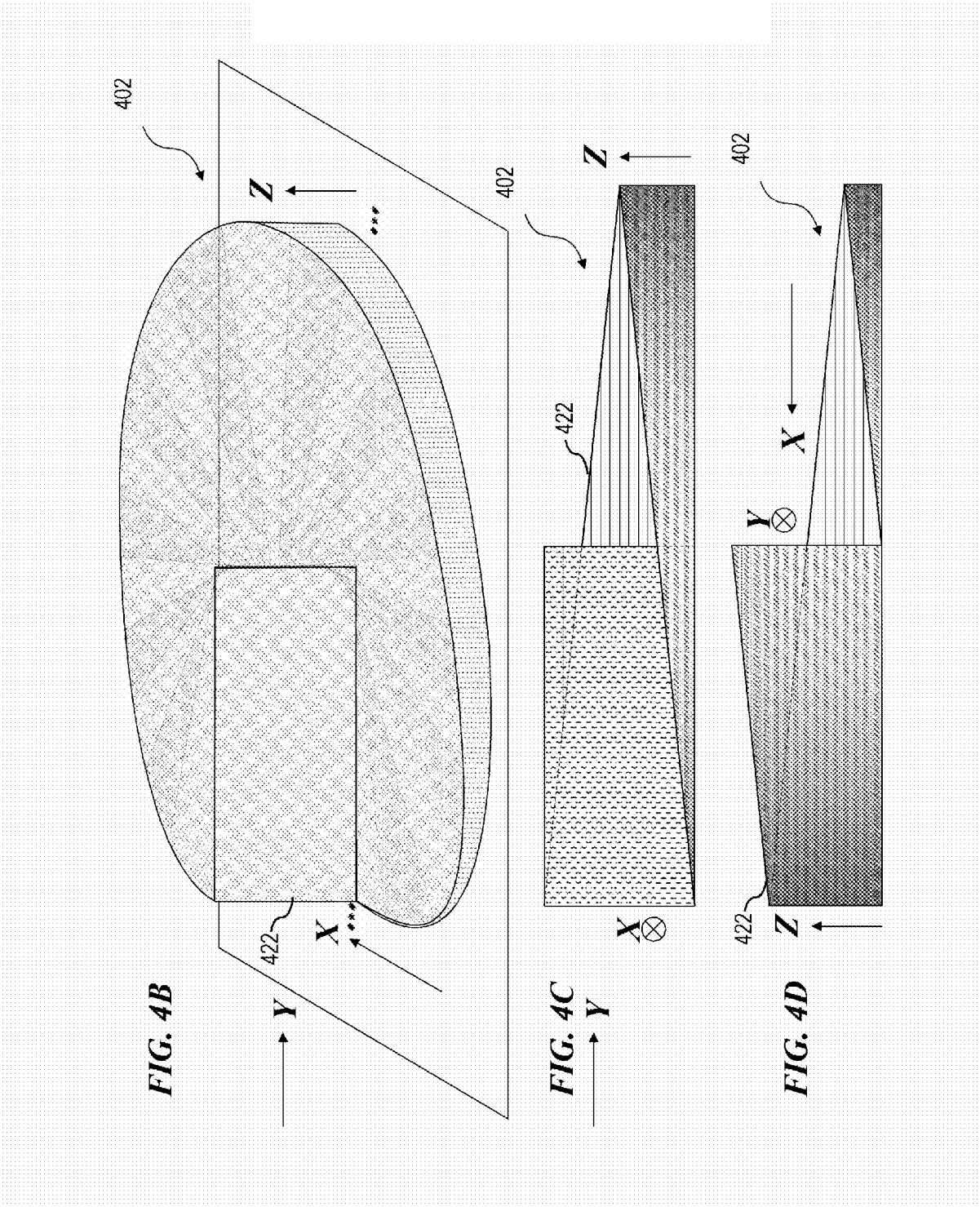

FIG. 4B FIG. 4C FIG. 4D

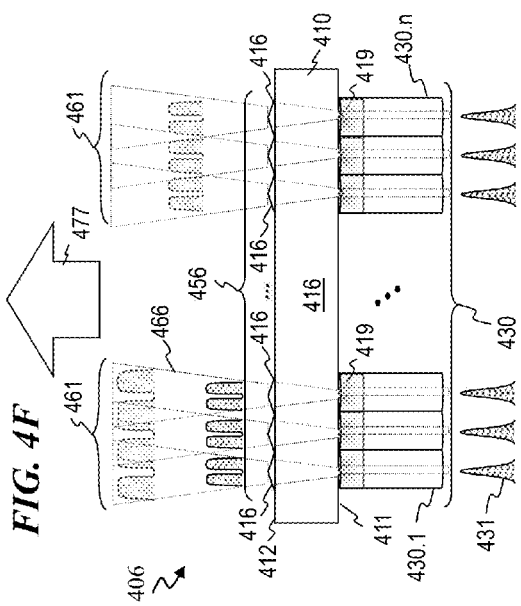

FIG. 4F

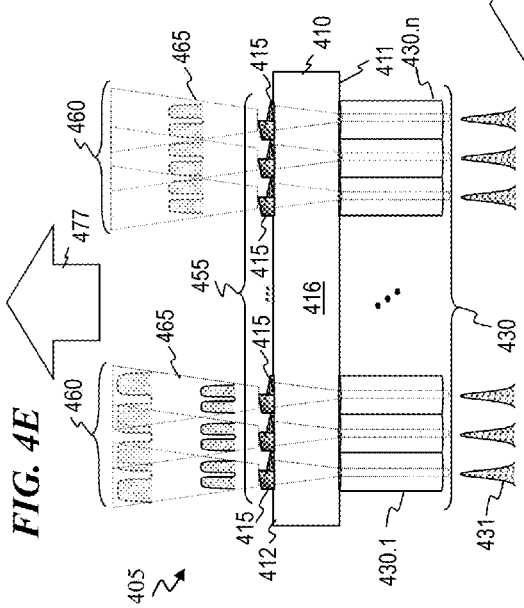

FIG. 4E

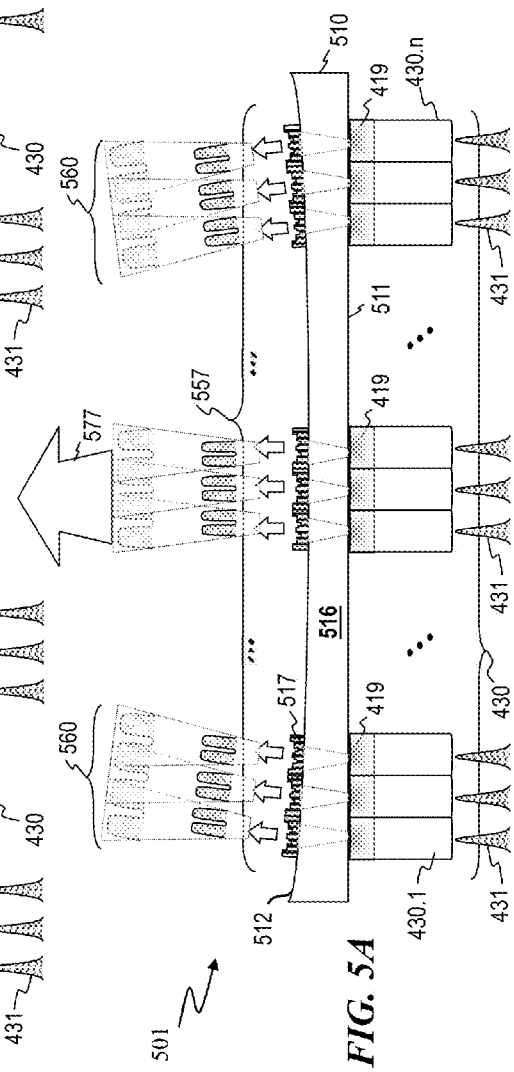

FIG. 5A

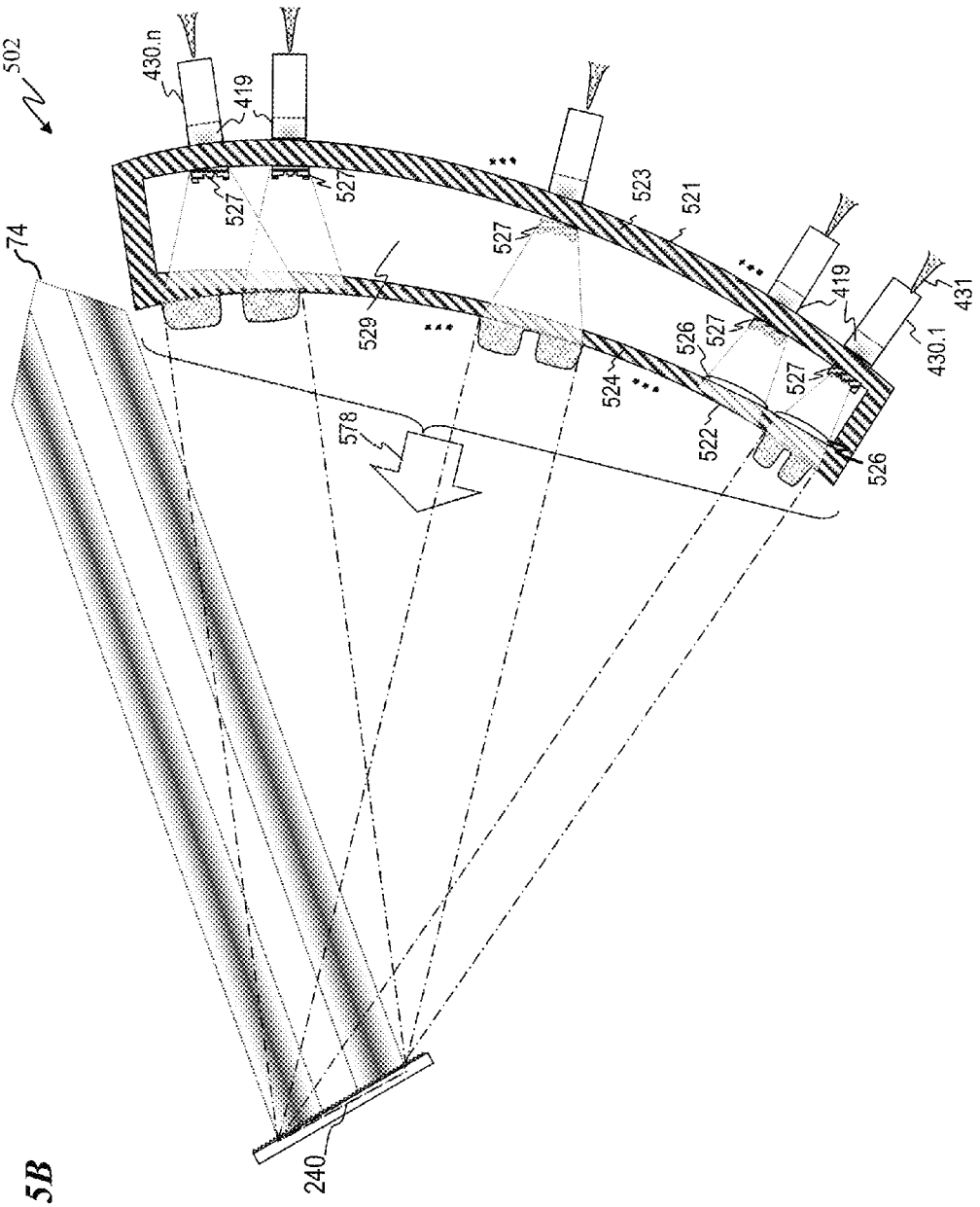
502
430.n
419
527
527
523
521
74
527
529
526
527
419
431
430.1
524
527
578
522
526
240

FIG. 5B

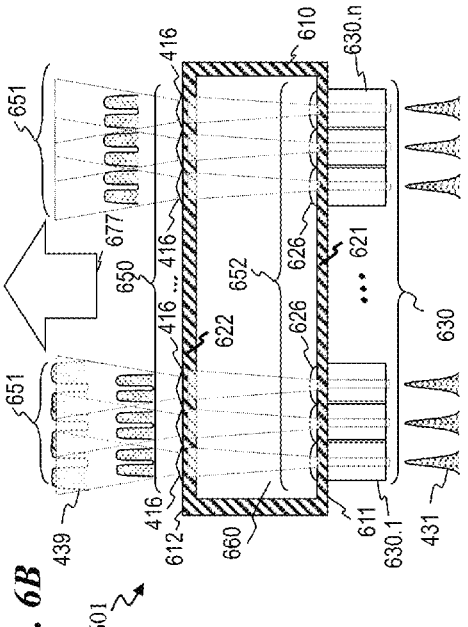

FIG. 6B

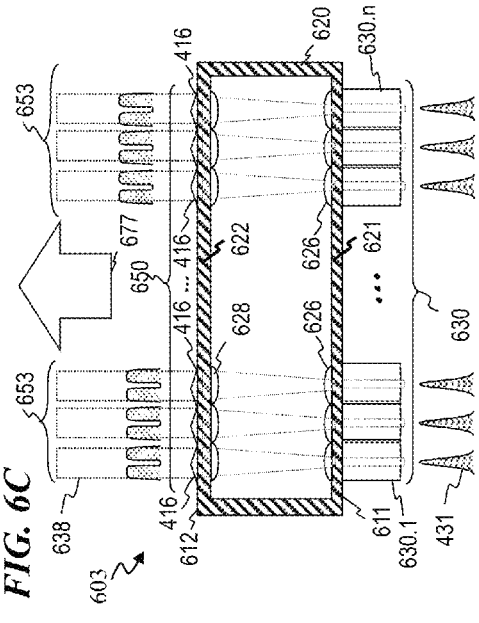

FIG. 6C

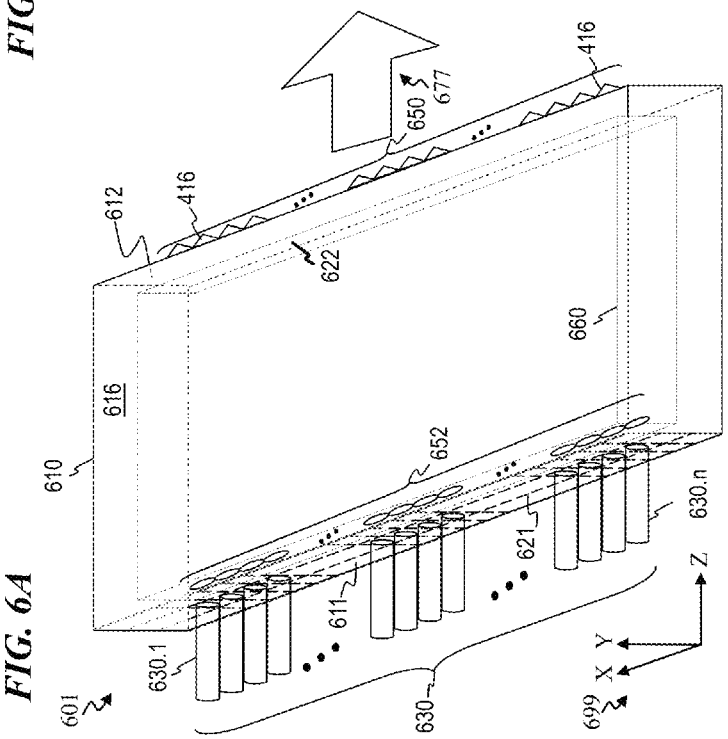

FIG. 6A

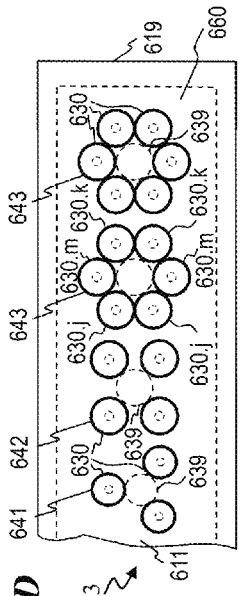

FIG. 6D

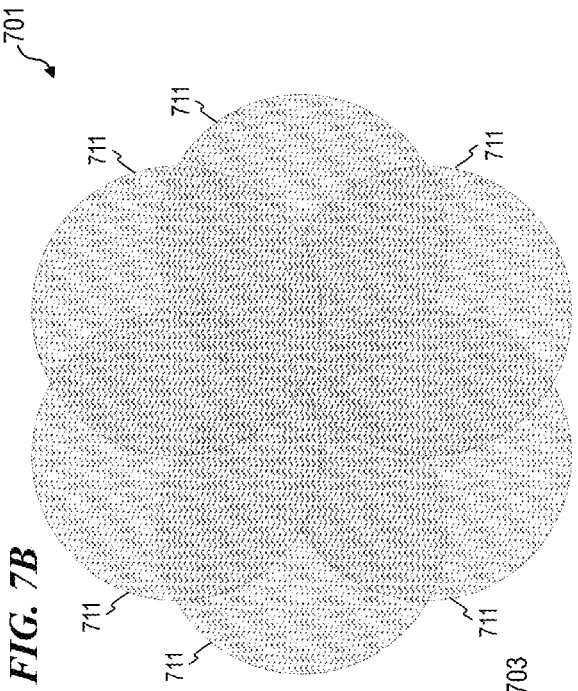

FIG. 7B

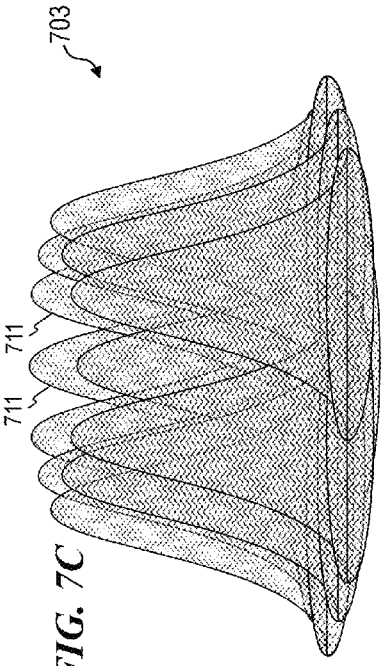

FIG. 7C

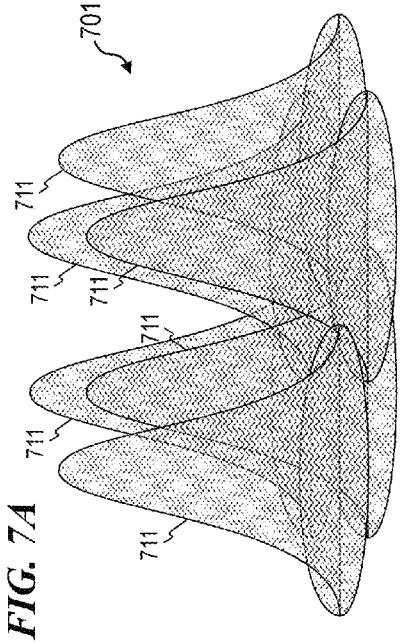

FIG. 7A

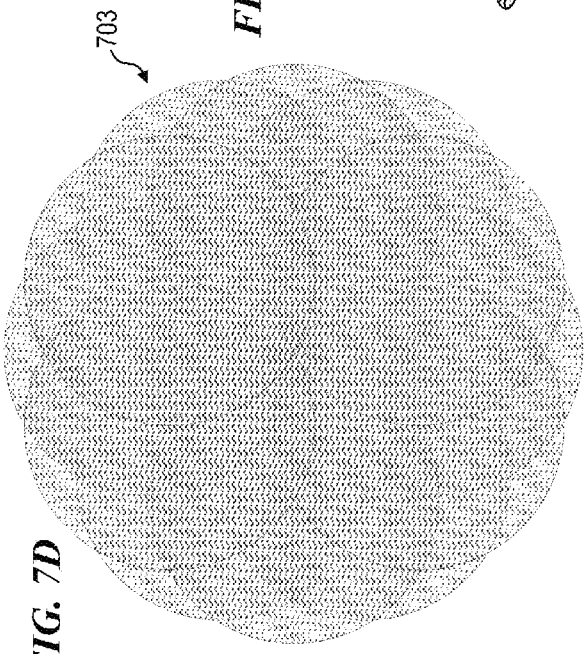

FIG. 7D

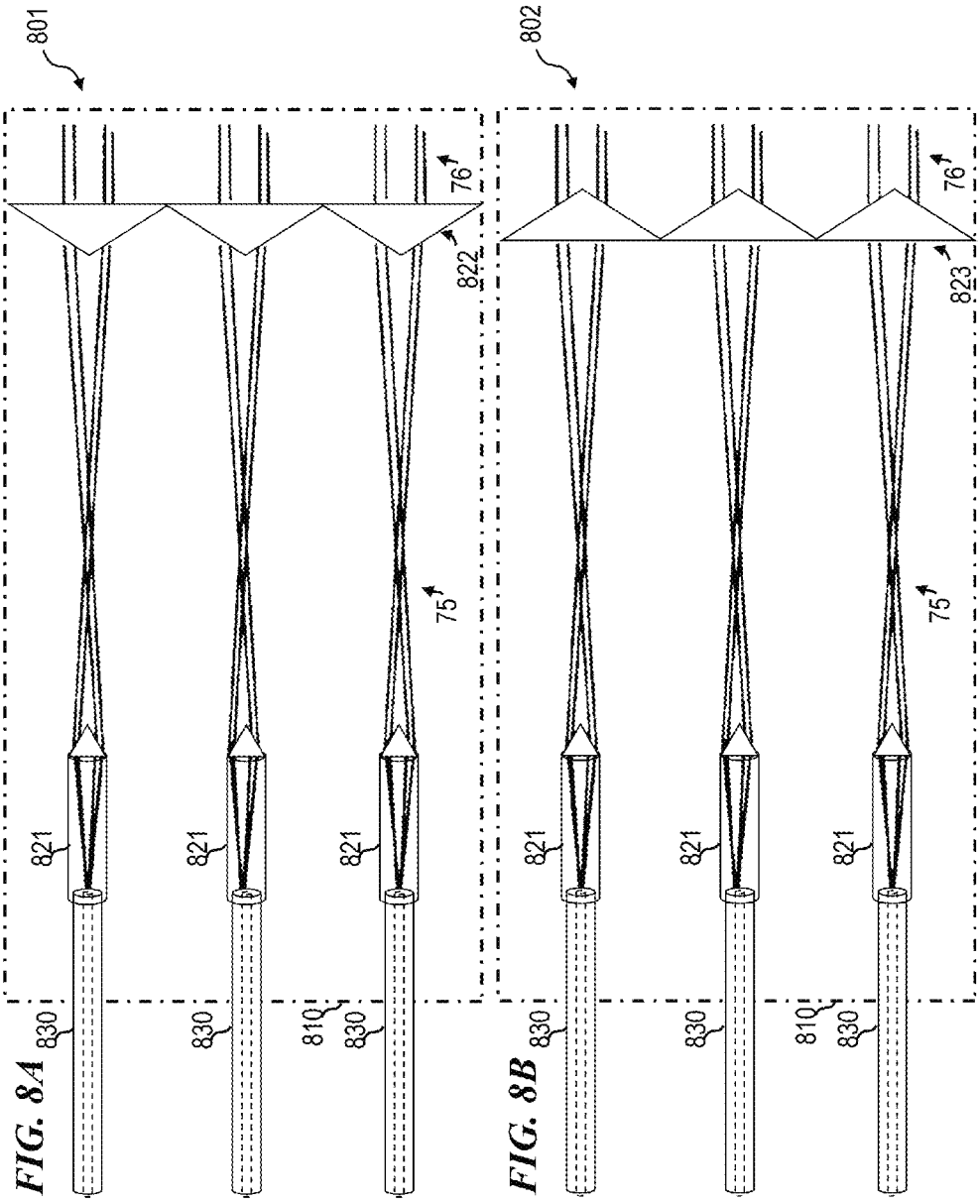

FIG. 8A

FIG. 8B

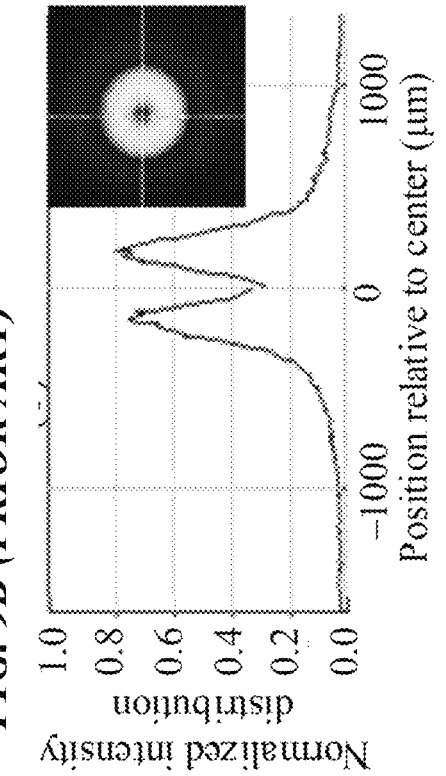

FIG. 9B (PRIOR ART)

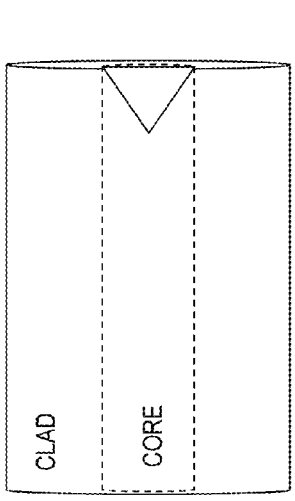

FIG. 9A (PRIOR ART)

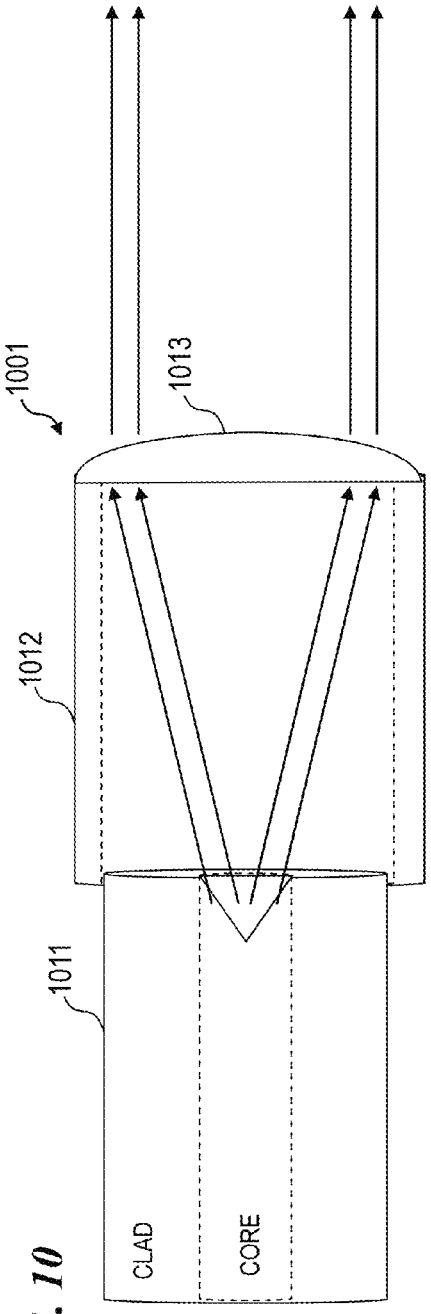

FIG. 10

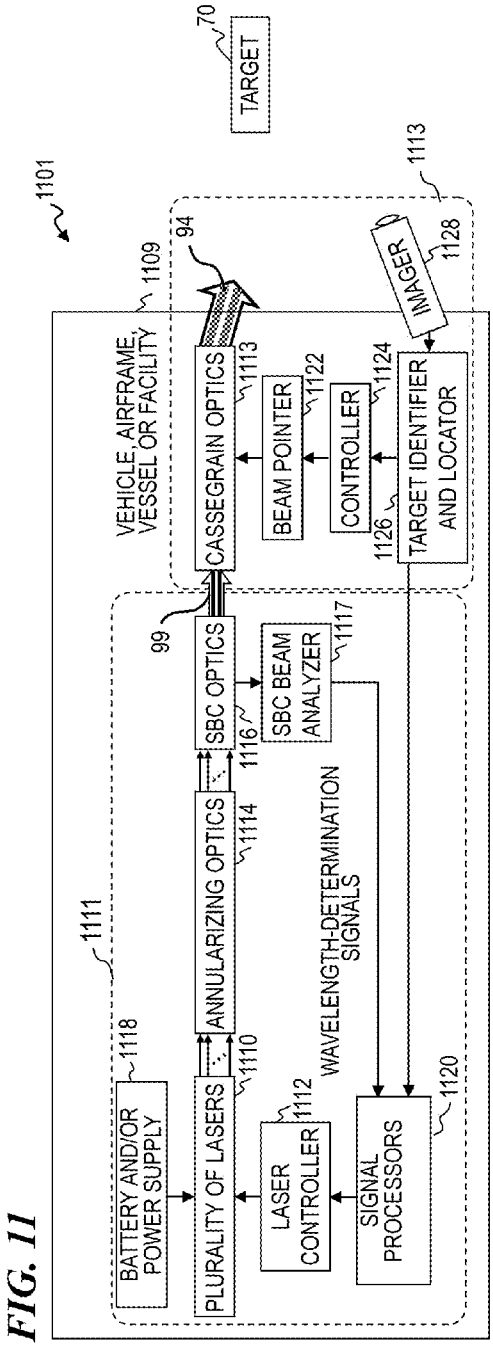
1101
1109
VEHICLE, AIRFRAME, VESSEL OR FACILITY
1111
BATTERY AND/OR POWER SUPPLY
1118
PLURALITY OF LASERS
1110
LASER CONTROLLER
1112
ANNULARIZING OPTICS
1114
SBC OPTICS
1116
SBC BEAM ANALYZER
1117
WAVELENGTH-DETERMINATION SIGNALS
SIGNAL PROCESSORS
1120
99
94
CASSEGRAIN OPTICS
1113
BEAM POINTER
1122
CONTROLLER
1124
1126
TARGET IDENTIFIER AND LOCATOR
IMAGER
1128
1113
70
TARGET

FIG. 11

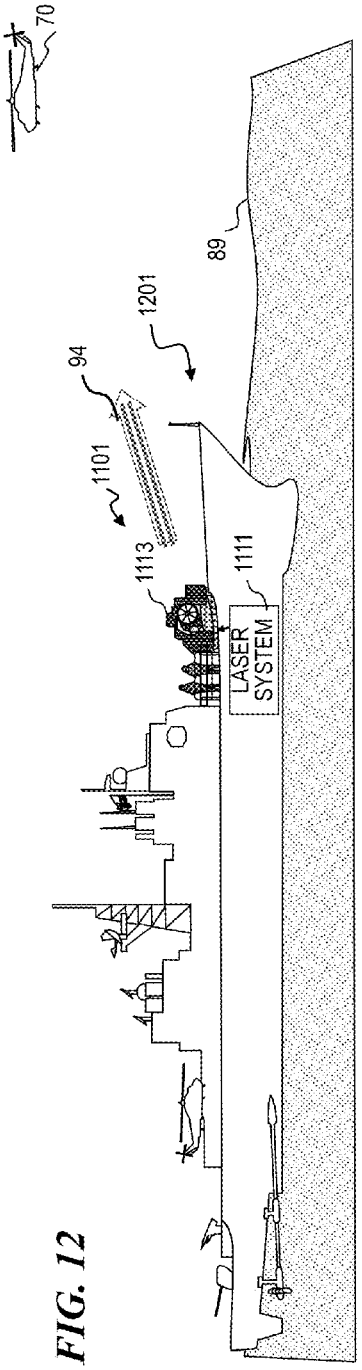
70
89
1201
94
1101
1113
1111
LASER SYSTEM

FIG. 12

METHOD AND APPARATUS FOR FIBER-LASER OUTPUT-BEAM SHAPING FOR BEAM COMBINATION

CROSS-REFERENCE TO RELATED APPLICATIONS

This application is a divisional of U.S. patent application Ser. No. 13/987,265 filed Feb. 18, 2014 (which issued as U.S. Pat. No. 9,366,872 on Jun. 14, 2016), titled "APPARATUS AND METHOD FOR FIBER-LASER OUTPUT-BEAM SHAPING FOR SPECTRAL BEAM COMBINATION", which is incorporated herein by reference in its entirety.

This application is related to:

U.S. Pat. No. 7,375,877, which issued May 20, 2008 to Di Teodoro et al., with the title "METHOD AND APPARATUS FOR LONG-RANGE LIDAR AND ACTIVE IMAGING WITH OPTICAL OUTPUT FROM A PHOTONIC-CRYSTAL ROD";

U.S. Pat. No. 8,472,763 to Liu, et al., which issued Jun. 25, 2013 with the title "SPECTRAL BEAM COMBINATION OF LASER BEAMS";

U.S. Pat. No. 7,671,337 to Tidwell, which issued Mar. 2, 2010 with the title "SYSTEM AND METHOD FOR POINTING A LASER BEAM";

U.S. Pat. No. 7,446,315 to Tidwell et al., which issued May 15, 2012 with the title "SYSTEM AND METHOD FOR AIRCRAFT INFRARED COUNTERMEASURES TO MISSILES";

U.S. Pat. No. 7,199,924, which issued Apr. 3, 2007 to Brown et al., with the title "APPARATUS AND METHOD FOR SPECTRAL-BEAM COMBINING OF HIGH-POWER FIBER LASERS";

U.S. Pat. No. 7,768,700, which issued Aug. 3, 2010 to Savage-Leuchs, with the title "METHOD AND APPARATUS FOR OPTICAL GAIN FIBER HAVING SEGMENTS OF DIFFERING CORE SIZES";

U.S. Pat. No. 7,835,608, which issued Nov. 16, 2010 to Minelly et al., with the title "METHOD AND APPARATUS FOR OPTICAL DELIVERY FIBER HAVING CLADDING WITH ABSORBING REGIONS";

U.S. Pat. No. 7,872,794, which issued to Minelly et al. on Jan. 18, 2011 with the title "HIGH-ENERGY EYE-SAFE PULSED FIBER AMPLIFIERS AND SOURCES OPERATING IN ERBIUM'S L-BAND";

U.S. Pat. No. 7,876,803, which issued to Di Teodoro et al. on Jan. 25, 2011 with the title "High-power, pulsed ring fiber oscillator and method,"

U.S. Pat. No. 8,179,594 to Tidwell et al., which issued May 15, 2012 with the title "METHOD AND APPARATUS FOR SPECTRAL-BEAM COMBINING OF FANNED-IN LASER BEAMS WITH CHROMATIC-DISPERSION COMPENSATION USING A PLURALITY OF DIFFRACTIVE GRATINGS";

U.S. patent application Ser. No. 12/799,982, which was filed Apr. 28, 2010 by Roy D. Mead with the title "HIGH-POWER LASER USING THULIUM-DOPED FIBER AMPLIFIER AND FREQUENCY QUADRUPLING FOR BLUE OUTPUT" (which issued as U.S. Pat. No. 8,953,647 on Feb. 10, 2015);

U.S. Pat. No. 8,441,718, which issued May 14, 2013 to Mead with the title "SPECTRALLY BEAM COMBINED LASER SYSTEM AND METHOD AT EYE-SAFER WAVELENGTHS"; and

U.S. Patent Publication No. US 2011/0091155 of Yilmaz et al., published Apr. 21, 2011 with the title "IN-LINE FORWARD/BACKWARD FIBER-OPTIC SIGNAL ANALYZER" (which issued as U.S. Pat. No. 8,755,649 on Jun. 17, 2014); which are all assigned to the owner of the present application, and which are all incorporated herein by reference.

FIELD OF THE INVENTION

The invention relates generally to high-power optical spectral beam combining using diffractive grating(s) and lasers, and more particularly to methods and apparatus for shaping high-power laser beams so they can be efficiently combined into a single output beam having an annular spatial profile.

BACKGROUND OF THE INVENTION

High-efficiency diffraction gratings are often useful in laser systems that employ very-high-power laser beams. In particular, systems that use spectral-beam combining to increase the total power of a single collimated laser beam to power levels of one megawatt or more have a need for high-efficiency (low-loss) diffraction gratings.

U.S. Pat. No. 7,199,924 to Brown et al. issued Apr. 3, 2007, titled "APPARATUS AND METHOD FOR SPECTRAL-BEAM COMBINING OF HIGH-POWER FIBER LASERS," is assigned to the owner of the present application, and is incorporated herein by reference. In U.S. Pat. No. 7,199,924 Brown et al. describe an apparatus and method for spectral-beam combining light from a plurality of high-power fiber lasers that, in some embodiments, use two substantially identical diffraction gratings in a parallel, mutually compensating configuration to combine a plurality of separate parallel input beams each having a slightly different successively higher wavelength into a single output beam of high quality. In other embodiments, a single diffraction grating is used to combine a plurality of different wavelengths, wherein the input laser beams are obtained from very narrow linewidth sources to reduce chromatic dispersion. In some embodiments, diagnostics and adjustments of wavelengths and/or positions and angles are made dynamically in real time to maintain the combination of the plurality input beams into a single high-quality output beam.

United States Patent Publication 2011/0091155 by Yilmaz et al., titled "IN-LINE FORWARD/BACKWARD FIBER-OPTIC SIGNAL ANALYZER," is assigned to the owner of the present application, and is incorporated herein by reference. In Publication 2011/0091155 (which issued as U.S. Pat. No. 8,755,649 on Jun. 17, 2014), Yilmaz et al. describe an optical connector having a plurality of directional taps and connecting between a plurality of optical waveguides (such as a connector between a waveguide that is part of, or leads from, a seed laser and/or an initial optical-gain-fiber power amplifier, and a waveguide that is part of, or leads to, an output optical-gain-fiber power amplifier and/or a delivery fiber), wherein one of the directional taps extracts a small amount of the forward-traveling optical output signal from the seed laser or initial power amplifier (wherein this forward-tapped signal is optionally monitored using a sensor for the forward-tapped signal), and wherein another of the directional taps extracts at least some of any backward-traveling optical signal that may have been reflected (wherein this backward-tapped signal is optionally monitored using a sensor for the backward-tapped signal).

U.S. Pat. No. 7,872,794 issued to Minelly et al. on Jan. 18, 2011 with the title "HIGH-ENERGY EYE-SAFE PULSED FIBER AMPLIFIERS AND SOURCES OPERATING IN

ERBIUM'S L-BAND," is assigned to the owner of the present application, and is incorporated herein by reference. In U.S. Pat. No. 7,872,794, Minelly et al. describe an apparatus and method that provide an optical-fiber amplifier having at least one erbium-doped fiber section and an optical pump coupled to the erbium-doped fiber section, wherein the apparatus is operable to amplify signal pulses to high energy in the erbium-doped fiber section, the pulses having a wavelength in the range of about 1565 nm to about 1630 nm. In some embodiments, the amplifying fiber is ytterbium-free.

U.S. Pat. No. 7,876,803 issued to Di Teodoro et al. on Jan. 25, 2011 with the title "High-power, pulsed ring fiber oscillator and method," is assigned to the owner of the present application, and is incorporated herein by reference. In U.S. Pat. No. 7,876,803, Di Teodoro et al. describe a ring laser includes a large-core rare-earth-doped fiber ring-connected with a free-space path having an electro-optic switch, output coupler, and intracavity band-pass filter to enforce lasing operation in narrow wavelength range. In some cavity-dumped modes, the laser is configured in a similar manner, except that an output coupler is omitted since the optical power is extracted from the laser cavity by the electro-optic switch itself. The same laser can be configured to operate in Q-switched and/or cavity-dumping modes as well as in hybrid modes (e.g., partial Q-switch, followed by cavity dumping, or even CW (continuous wave)). In some embodiments, the laser can be used as, or inject laser light into, a regenerative solid-state amplifier, or a Raman laser, or can be also used to generate visible, ultra-violet, mid-infrared, and far-infrared (THz) radiation via nonlinear wavelength conversion processes. The various embodiments can use a power oscillator or seed-plus-amplifier MOPA configuration.

U.S. Pat. No. 8,526,110 to Honea et al. issued Sep. 3, 2013, titled "SPECTRAL-BEAM COMBINING FOR HIGH-POWER FIBER-RING-LASER SYSTEMS," is assigned to the owner of the present application, and is incorporated herein by reference. In U.S. Pat. No. 8,526,110 Honea et al. describe a ring-laser system that includes a plurality of ring-laser gain elements and a spectral-beam-combining output stage configured to combine a plurality of beams coming from the gain elements into an output beam and that includes chromatic-dispersion compensation. In some embodiments, the output stage includes a plurality of highly reflective dielectric-coated focussing elements. In some embodiments, the output stage includes a plurality of high-efficiency dielectric-coated grating elements. In some embodiments, the output stage includes a mostly reflective but partially transmissive output mirror and a highly reflective beam-reversing mirror configured to reflect a majority of a backward-traveling signal beam such that it becomes forward traveling. In some embodiments, each gain element further includes a photonic-crystal-rod power amplifier. Some embodiments have an amplitude modulator configured to pulse the plurality of beams, and a timing controller configured to synchronize the pulses of the plurality of beams. Some embodiments further include a non-linear wavelength-conversion device.

U.S. Pat. No. 8,503,840 to Hu et al. issued Aug. 6, 2013 titled "OPTICAL-FIBER ARRAY METHOD AND APPARATUS," is assigned to the owner of the present application, and is incorporated herein by reference. In U.S. Pat. No. 8,503,840, Hu et al. describe a method and apparatus for forming an optical-fiber-array assembly, which includes providing a plurality of optical fibers including a first optical fiber and a second optical fiber, providing a fiber-array plate that includes a first surface and a second surface, connecting the plurality of optical fibers to the first surface of the fiber-array plate, transmitting a plurality of optical signals through the optical fibers into the fiber-array plate at the first surface of the fiber-array plate, and emitting from the second surface of the fiber-array plate a composite output beam having light from the plurality of optical signals. Optionally, the first surface of the fiber-array plate includes indicia configured to assist in the alignment of the plurality of optical fibers on the first surface of the fiber-array plate. In some embodiments, the second surface of the fiber-array plate includes a plurality of beam-shaping optics configured to shape the composite output beam.

U.S. Pat. No. 8,493,651 to Hu et al. issued Jul. 23, 2013 titled "Apparatus for optical fiber management and cooling," is assigned to the owner of the present application, and is incorporated herein by reference. In U.S. Pat. No. 8,493,651 an apparatus and method that provides management and cooling of an optical fiber by looping the optical fiber around the inner surface of a heat-conductive cylinder and around the outer surface of the heat-conductive cylinder, such that the optical fiber enters and exits the heat-conductive cylinder on substantially the same plane. Some embodiments use a continuous groove on the inside and outside of the cylinder for guiding and managing the optical fiber. Some embodiments use a plurality of protruding fiber guides for guiding and managing the optical fiber. Some embodiments use an integrated tube for guiding and managing the optical fiber. In some embodiments, the optical fiber looped on the inner surface and outer surface are spaced apart substantially equally. In some other embodiments, the optical fiber loops are spaced further apart for portions of the fiber carrying higher power.

U.S. Pat. No. 8,441,718 to Mead issued May 14, 2013 titled "Spectrally beam combined laser system and method at eye-safer wavelengths," is assigned to the owner of the present application, and is incorporated herein by reference. In U.S. Pat. No. 8,441,718, Mead describes a method and system in which fiber-laser light is Raman shifted to eye-safer wavelengths prior to spectral beam combination, enabling a high-power, eye-safer wavelength directed-energy (DE) system. The output of Ytterbium fiber lasers is not used directly for spectral beam combining. Rather, the power from the Yb fiber lasers is Raman-shifted to longer wavelengths, and these wavelengths are then spectrally beam combined. Raman shifting is most readily accomplished with a "cascaded Raman converter," in which a series of nested fiber cavities is formed using fiber Bragg gratings.

U.S. Pat. No. 8,411,712 to Honea, et al. issued Apr. 2, 2013 titled "Beam diagnostics and feedback system and method for spectrally beam-combined lasers," is assigned to the owner of the present application, and is incorporated herein by reference. In U.S. Pat. No. 8,411,712, Honea, et al. describe an apparatus and method for control of lasers (which use an array of optical gain fibers) in order to improve spectrally beam-combined (SBC) laser beam quality along the plane of the SBC fiber array via spectral-to-spatial mapping of a portion of the spectrally beam-combined laser beams, detection of optical power in each of the spatially dispersed beams and feedback control of the lasers for wavelength-drift correction. The apparatus includes a diffractive element; a source of a plurality of substantially monochromatic light beams directed from different angles to a single location on the diffractive element, wherein the diffractive element spectrally combines the plurality of light beams into a single beam. A controller adjusts characteristics

of the light beams if one of the light beams has become misadjusted. In some embodiments, the controller adjusts the wavelength tuning of the respective fiber laser.

U.S. Pat. No. 8,199,399 to Savage-Leuchs issued Jun. 12, 2012, titled "Optical gain fiber having segments of differing core sizes and associated method," is assigned to the owner of the present application, and is incorporated herein by reference. In U.S. Pat. No. 8,199,399, Savage-Leuchs describes an apparatus and method for amplifying laser signals using segments of fibers of differing core diameters and/or differing cladding diameters to suppress amplified spontaneous emission and non-linear effects such as four-wave mixing (FWM), self-phase modulation, and stimulated Brillouin and/or Raman scattering (SBS/SRS). In some embodiments, different core sizes have different sideband spacings (spacing between the desired signal and wavelength-shifted lobes). Changing core sizes and providing phase mismatches prevent buildup of non-linear effects. Some embodiments further include a bandpass filter to remove signal other than the desired signal wavelength and/or a time gate to remove signal at times other than during the desired signal pulse. Some embodiments include photonic-crystal structures to define the core for the signal and/or the inner cladding for the pump. Some embodiments include an inner glass cladding to confine the signal in the core and an outer glass cladding to confine pump light in the inner cladding.

U.S. Pat. No. 8,179,594 to Tidwell, et al. issued May 15, 2012 titled "Method and apparatus for spectral-beam combining of fanned-in laser beams with chromatic-dispersion compensation using a plurality of diffractive gratings," is assigned to the owner of the present application, and is incorporated herein by reference. In U.S. Pat. No. 8,179,594, Tidwell, et al. describe an apparatus and method for spectral-beam combining of light from a plurality of high-power lasers (e.g., fiber MOPA lasers) that, in some embodiments, use substantially identical diffraction gratings in a 1-D non-parallel, mutually compensating configuration to combine non-parallel intersecting input beams in one plane each having a slightly different successively higher wavelength into a single output beam of high quality. In other embodiments, an output grating and one or more input gratings in a 1-D parallel, mutually compensating configuration combine non-parallel input beams in one plane into a single output beam of high quality. In other embodiments, a 2-D plurality of input gratings in a non-parallel configuration combine a plurality of non-parallel input beams not in one plane each having a slightly different successively higher wavelength into a set of intersecting beams in one plane directed towards an output grating that compensates for chromatic dispersions introduced by the input gratings.

U.S. Pat. No. 7,065,107 to Hamilton, et al. issued Jun. 20, 2006 titled "Spectral beam combination of broad-stripe laser diodes," is assigned to the owner of the present application, and is incorporated herein by reference. In U.S. Pat. No. 7,065,107, Hamilton, et al. describe a method and apparatus for improving the beam quality of the emissions from a multimode gain medium such as a broad-stripe laser through the use of SBC techniques is provided. In order to achieve the desired beam quality without a significant reduction in output power, discrete lasing regions are formed across the gain medium using an etalon or similar device located within the SBC cavity.

U.S. Pat. No. 8,094,689 to Koplow issued Jan. 10, 2012, titled "Laser systems configured to output a spectrally-consolidated laser beam and related methods," and is incorporated herein by reference. In U.S. Pat. No. 8,094,689, Koplow describes a laser apparatus that includes a plurality of pumps each of which is configured to emit a corresponding pump laser beam having a unique peak wavelength. The laser apparatus includes a spectral beam combiner configured to combine the corresponding pump laser beams into a substantially spatially-coherent pump laser beam having a pump spectrum that includes the unique peak wavelengths, and first and second selectively reflective elements spaced from each other to define a lasing cavity including a lasing medium therein. The lasing medium generates a plurality of gain spectra responsive to absorbing the pump laser beam. Each gain spectrum corresponds to a respective one of the unique peak wavelengths of the substantially spatially-coherent pump laser beam and partially overlaps with all other ones of the gain spectra. The reflective elements are configured to promote emission of a laser beam from the lasing medium with a peak wavelength common to each gain spectrum.

EXEMPLARY DIFFRACTIVE ELEMENTS that can be used in some embodiments of the present invention include:

U.S. Pat. No. 6,754,006 titled "Hybrid metallic-dielectric grating" issued Jun. 22, 2004 to Barton et al. and is incorporated herein by reference. This patent describes a diffraction grating having a metallic base layer and layers of dielectric materials of varying refractive index, where a bottom interface of the layers is adherent to the metallic base layer. The dielectric layers are periodically spaced on top of the metallic base layer, leaving the metallic base layer exposed in regions. This grating allows for the polarization-insensitive reflective properties of the base metallic layer to operate in conjunction with the polarization sensitive diffraction properties of the multilayer grating structure to provide near 100% diffraction efficiency over a reasonable wavelength bandwidth, independent of the polarization of the incident beam.

U.S. Pat. No. 6,822,796 to Takada et al. titled "Diffractive optical element" (incorporated herein by reference) describes a method for making blazed gratings having asymmetric grooves with dielectric coatings. U.S. Pat. No. 6,958,859 to Hoose et al. titled "Grating device with high diffraction efficiency" (incorporated herein by reference) describes a method for making blazed gratings having dielectric coatings.

U.S. Pat. No. 5,907,436 titled "Multilayer dielectric diffraction gratings" issued May 25, 1999 to Perry et al., and is incorporated herein by reference. This patent describes the design and fabrication of dielectric grating structures with high diffraction efficiency. The gratings have a multilayer structure of alternating index dielectric materials, with a grating structure on top of the multilayer, and obtain a diffraction grating of adjustable efficiency, and variable optical bandwidth.

Even with high-efficiency multi-layered dielectric diffraction gratings such as those described above, a non-negligible amount of energy is absorbed in the grating, which heats and distorts the grating. A diamond layer in thermal contact with the grating can improve heat transfer. EXEMPLARY DIAMOND-LAYER COOLING SUBSTRATES that can be used in some embodiments include:

PCT Publication No. WO 2013/062584, which published May 2, 2013, of PCT Patent Application PCT/US11/58352 titled "Devices including a diamond layer" filed Oct. 28, 2011 by Liang et al., is incorporated herein by reference. Liang et al. describe a device that includes a substrate layer, a diamond layer, and a device layer. The device layer is patterned. The diamond layer is to conform to a pattern associated with the device layer.

U.S. Pat. No. 6,830,813 to Ravi, which issued Dec. 14, 2004 and is titled "Stress-reducing structure for electronic devices," is incorporated herein by reference. Ravi describes an electronic apparatus having a heat transfer/stress-reducing layer combined with a device layer and methods of fabricating such electronic apparatus provide a means for incorporating a heat transfer layer in an integrated circuit. A structure with a diamond layer incorporated beneath a device layer provides a heat transfer layer for the structure. In an embodiment, a compliant layer is formed between a diamond layer and a substrate to provide stress reduction. In another embodiment, a diamond layer is formed as a layer of islands of diamond from nucleation centers to provide stress reduction.

U.S. Pat. No. 7,501,330 to Ravi, et al., which issued Mar. 10, 2009 and is titled "Methods of forming a high conductivity diamond film and structures formed thereby," is incorporated herein by reference. Ravi, et al. describe a method of forming a high thermal conductivity diamond film and its associated structures comprising selectively nucleating a region of a substrate, and forming a diamond film on the substrate such that the diamond film has large grains, which are at least about 20 microns in size. The larger grained diamond film has greatly improved thermal management capabilities and improves the efficiency and speed of a microelectronic device.

U.S. Pat. No. 7,846,767 to Sung issued Dec. 7, 2010 titled "Semiconductor-on-diamond devices and associated methods," and is incorporated herein by reference. U.S. Pat. No. 7,846,767 describes semiconductor-on-diamond (SOD) substrates and methods for making such substrates. In one aspect, a method of making an SOD device is provided that includes etching depressions into an etch surface of a semiconductor substrate to a uniform depth, depositing a diamond layer onto the etch surface to form diamond-filled depressions, and thinning the semiconductor substrate at a thinning surface opposite the etch surface until the diamond filled depressions are exposed, thus forming a semiconductor device having a thickness substantially equal to the uniform depth.

CONVENTIONAL DIFFRACTIVE BEAM SHAPERS include the following:

U.S. Pat. No. 4,813,762 issued to Leger et al. on Mar. 21, 1989 titled "Coherent beam combining of lasers using microlenses and diffractive coupling," and is incorporated herein by reference. U.S. Pat. No. 4,813,762 describes a diffractive lenslet array receives light from multiple lasers. The lenslet array is spaced apart from a partially reflecting mirror by a distance $Z=n\times d^2/\lambda$, where n is an integer or half integer, λ is the laser wavelength and d is the spacing of the lenslets in the array. In a preferred embodiment the apparatus is a unitary design in which the lenslets are etched into one surface of a substrate and a parallel surface is coated to form the partially reflecting mirror. The lenslets abut one another to produce a fill factor (percentage of array containing light) close to one and each of the lenslets is a multistep diffractive lens. Diffractive spreading over a round trip distance from lasers to mirror and back again causes feedback light from a single lenslet to couple into adjacent lenslets. The light from all the lenslets is coupled back into the laser waveguides efficiently only when the wavefront at each of the lenslets is flat, that is, when the phase of the feedback is uniform across a lenslet. Uniformity is achieved when the separation between lenslet array and mirror is the Talbot self-imaging condition set forth above.

U.S. Pat. No. 5,454,004 to Leger issued Sep. 26, 1995 titled "Phase grating and mode-selecting mirror for a laser," and is incorporated herein by reference. U.S. Pat. No. 5,454,004 describes a method for making a custom phase-conjugating diffractive mirror for a laser resonator comprising the steps of: (a) choosing a specified beam mode profile a_i (x,y) that will suit need of a designer, (b) calculating the mode profile b(x',y') which is a value of the specified a_i (x,y) that is propagated to the reflection surface of the diffractive mirror and (c) calculating mirror reflectance t(x',y') which reflects phase conjugate of b(x',y'). A method for fabricating such a mirror is shown. Another aspect of the invention is the addition of a phase-adjusting element into a laser resonator, and compensating for the addition of a phase-adjusting element in the design of other phase-adjusting elements such as the mirrors.

Other Beam Shapers

United States Patent Application Publication 2011/0249320 by Savage-Leuchs et al. titled "High beam quality and high average power from large-core-size optical-fiber amplifiers" (which issued as U.S. Pat. No. 8,830,568 on Sep. 9, 2014), and United States Patent Application Publication 2011/0249321 by Savage-Leuchs et al. titled "Signal and pump mode-field adaptor for double-clad fibers and associated method" (which issued as U.S. Pat. No. 8,767,286 on Jul. 1, 2014), are assigned to the owner of the present application, and are incorporated herein by reference. In these publications, Savage-Leuchs et al. describe an apparatus, method and use for improving and merging core pumping and cladding pumping to enable high-power fiber-laser systems having excellent beam quality while using large-core (LMA) step-index gain fibers at very high optical power, wherein the core pumping includes mixing a laser seed optical signal (having a signal wavelength) with optical core-pump light (having a core-pump wavelength that is near the signal wavelength) in a manner that matches the modes of the seed optical signal and the pump light. Savage-Leuchs et al. also describe mode-matching double-clad fibers. In some embodiments, a first fiber section that has a first core, wherein the first core has a first core diameter connects to a mode-field adaptor, wherein the mode-field adaptor includes a first portion having a central volume that has a substantially constant index-of-refraction radial profile and a diameter larger than the first core diameter, and a second portion that has a graded-index (GRIN) central volume, wherein the GRIN central volume has a central axis and a graded index-of-refraction radial profile having an index that gradually decreases at larger distances from its central axis and a length selected to focus light into the core of a second fiber wherein the second core has a diameter that is larger than the first core diameter, and wherein the second fiber section is double clad. Some embodiments are polarized.

U.S. Pat. No. 7,128,943 (hereinafter, "Djeu"), titled "Methods for fabricating lenses at the end of optical fibers in the far field of the fiber aperture," issued Oct. 31, 2006, and incorporated herein by reference. Djeu describe a microlens affixed in the far field of an optical fiber to spatially transform a beam either entering or exiting the fiber. In a first embodiment, a droplet of photo polymer is placed on the end of an optical fiber and the fiber is spun to create an artificial gravity. The droplet is cured by UV radiation during the spinning. In some embodiments, the method described by Djeu is modified such that lenslets are suitably formed on surface **512** of base plate **510**, wherein the lenslets provide the annularizing and the focussing of the beams **560**.

There remains a need in the art for improved systems and methods for beam shaping in spectral-beam-combination systems, methods and devices.

SUMMARY OF THE INVENTION

The present invention provides an apparatus and method for reshaping the spatial intensity profile of each one of a plurality of fiber-laser source beams (sometimes called beamlets) in the free space region of a beam-combining system, such as that used for spectral beam combining (as described in U.S. Pat. No. 8,179,594 to Tidwell, et al., U.S. Pat. No. 7,199,924 to Brown et al., U.S. Pat. No. 8,526,110 to Honea et al., and U.S. Pat. No. 8,503,840 to Hu et al.), which are all incorporated herein by reference.

In some embodiments, the reshaping optics includes a refractive or diffractive pair of optics to reshape each beam, the optics being configured to match the beam size and pitch of the beams emitting from a fiber array. In some embodiments, these optics are fabricated in an array to match the beam size and pitch of the fiber-array beams using lithographic and etching techniques. Another embodiment uses a spiral phase plate in front of each fiber laser output to convert the Gaussian beam to a Laguerre Gaussian LG_{10} mode. To produce a collimated beam for use with the spiral phase plate, a lens is used to collimate each beam prior to the spiral phase plate. In some embodiments, the lens is incorporated into the optic assembly holding the phase plate, e.g., in some embodiments, it is fabricated on one side of an optical surface with the spiral phase plate on the other side. In other embodiments, the lens is fused to the fiber tip to make the fiber output collimated at a size that manages the optical intensity to an acceptable level and Rayleigh range of the optical beam for ease of alignment. A third embodiment fuses an optical element, such as a micro axicon, on each fiber tip to shape the beam, with an optional optic to compensate for each beam. In some embodiments, the compensation optics are fabricated in an array using lithographic techniques. In some embodiments, a plurality of fibers are fused to a single focussing and annular-beam shaping assembly that forms annular beams that are then collimated and directed towards a spectral-beam-combining grating, which combines the annular beams impinging on the grating into a single annular beam. In some embodiments, the single spectrally combined annular beam is output through a Cassegrain optical projector, and in some embodiments, the beam is used for military purposes such as disabling aircraft, naval vessels, or other mobile vehicles.

In some embodiments, the present invention provides a method and apparatus for combining a plurality of laser beamlets to form a single annular beam using spectral beam combination. This invention includes a plurality of laser sources that emit a plurality of beamlets, wherein each one of the plurality of beamlets has a different wavelength; a beam annularizer that includes a plurality of optical units arranged to receive the beamlets, and configured to convert each beamlet into a respective annular beam that has an annular cross-sectional power profile; a beam-intersection transform element configured to point each respective one of the plurality of annular beams in an angular intersection arrangement toward a first location; and a spectral beam combiner at the first location configured to combine the plurality of wavelengths in the plurality of annular beams into a first annular spectrally combined beam.

Some embodiments of the apparatus further include a vehicle; an electrical power supply mounted to the vehicle; a laser controller mounted to the vehicle and operatively coupled to receive electrical power from the electrical power supply and operably coupled to power and control the plurality of laser sources; a Cassegrain projector mounted to the vehicle and operatively coupled to receive the first annular spectrally combined beam and configured to form a collimated second annular output beam from the optical energy of the first annular spectrally combined beam; and a beam-direction controller operably coupled to the Cassegrain projector and operable to direct the second annular output beam in one of a plurality of different possible directions relative to the vehicle. In various embodiments, the vehicle can be a land vehicle (e.g., with the Cassegrain projector mounted to a wheeled (e.g., truck trailer or Humvee®) or tracked (e.g., M1A2 Abrams tank) vehicle), a naval vehicle (e.g., a missile destroyer, submarine, or other warship), an aircraft, or a space-based satellite.

Some embodiments of the apparatus further include a materials-processing system; an electrical power supply connected to the materials-processing system; a laser controller in the materials-processing system and operatively coupled to receive electrical power from the electrical power supply and operably coupled to power and control the plurality of laser sources; and a Cassegrain projector mounted to the materials-processing system and operatively coupled to receive the first annular spectrally combined beam and configured to form a collimated second annular output beam from the optical energy of the first annular spectrally combined beam; wherein the Cassegrain projector is operable to direct the second annular output beam toward materials being processed all at once. In some embodiments, for example, the present invention is used annealing a large area of metal, or curing a paint-powder-coated workpiece, or solidifying and/or annealing a layer of powder deposited by a three-dimensional printer that has been partially solidified or hardened by a spot laser or a ink-jet spray of water or other liquid.

BRIEF DESCRIPTION OF THE DRAWINGS

FIG. **1**A is a schematic cross-sectional side view of a laser-beam-director system **101** that uses a Cassegrain output-optic device and an input beam that has a Gaussian spatial power profile.

FIG. **1**B is a perspective view of a laser-beam-director system **102** that uses a Cassegrain output optic device.

FIG. **1**C is a schematic cross-sectional side view of a laser-beam-director system **103** that uses a Cassegrain output optic device and an input beam that has a flat-topped annular spatial power profile.

FIG. **1**D is a schematic cross-sectional side view of a laser-beam-shaper subsystem **104** that provides a beam that has an azimuthally symmetric spatial profile such as a Super-Gaussian.

FIG. **1**E is a schematic cross-sectional side view of a laser-beam director system **105** that uses a Cassegrain output optic device and an input beam that has an annular spatial power profile **96** that is similar to or identical to a Laguerre-Gaussian optical mode.

FIG. **2**A is a schematic cross-sectional side view of a shaped-laser-beam spectral-beam combiner system **201** that provides an input beam for a beam director (e.g., for FIG. **1**C or FIG. **1**E) that has an annular spatial power profile.

FIG. **2**B is a schematic cross-sectional side view of a shaped-laser-beam spectral-beam combiner system **202** that provides an input beam for a beam director (e.g., for FIG. **1**C or FIG. **1**E) that has an annular spatial power profile.

FIG. **2**C is a schematic cross-sectional side view of a shaped-laser-beam spectral-beam combiner system **203** that provides an input beam for a beam director (e.g., for FIG. **1**C or FIG. **1**E) that has an annular spatial power profile.

FIG. **2**D is a schematic cross-sectional side view of another shaped-laser-beam spectral-beam combiner system **204** that provides an input beam (e.g., for FIG. **1**C or FIG. **1**E) that has an annular spatial power profile.

FIG. **3** is a schematic diagram of a shaped-laser-beam system **301** that uses a phase plate **320** to provide a shaped input beam that has an annular spatial power profile **377**.

FIG. **4**A is a schematic perspective-view diagram of a shaped-laser-beam system **401** that uses a stepped-spiral phase plate **420** to provide a shaped input beam that has an annular spatial power profile **477**.

FIG. **4**B is a schematic perspective-view diagram of a shaped-laser-beam system **402** that uses a smooth-spiral phase plate **422** to provide a shaped input beam that has an annular spatial power profile **477**.

FIG. **4**C is a schematic side-view diagram of a shaped-laser-beam system **402** that uses a smooth-spiral phase plate **422** to provide a shaped input beam that has an annular spatial power profile **477**.

FIG. **4**D is another schematic side-view diagram (from a viewpoint 90 degrees relative to that of FIG. **4**C) of a shaped-laser-beam system **402** that uses a smooth-spiral phase plate **422** to provide a shaped input beam that has an annular spatial power profile **477**.

FIG. **4**E is a schematic plan view of an optical-fiber-array assembly **405**.

FIG. **4**F is a schematic plan view of an optical-fiber-array assembly **406**.

FIG. **5**A is a schematic plan view of an optical-fiber-array assembly **501**.

FIG. **5**B is a schematic plan view of an optical-fiber-array assembly **502**.

FIG. **6**A is a schematic perspective view of an optical-fiber-array assembly **601**.

FIG. **6**B is a schematic plan view of optical-fiber-array assembly **601**.

FIG. **6**C is a schematic plan view of optical-fiber-array assembly **603**.

FIG. **6**D is a schematic input-end (elevational) view of optical-fiber-array assembly **604** having a plurality of fibers **630** are fused in a two-dimensional array to the input face **611** of base plate **610** or **620**.

FIG. **7**A is a schematic diagram of amplitudes of a plurality of beams **711** (six beams) from shaped-laser-beam system **604** that uses a plurality of Gaussian emitters to provide a shaped input beam that has an annular spatial power profile **710**.

FIG. **7**B is a schematic plan-view diagram of amplitudes of a plurality of (e.g., in this case, six) beams **711** from shaped-laser-beam system **604**.

FIG. **7**C is a schematic diagram of amplitudes of a plurality of beams **711** (twelve beams) from shaped-laser-beam system **604** that uses a plurality of Gaussian emitters to provide a shaped input beam that has an annular spatial power profile **710**.

FIG. **7**D is a schematic plan-view diagram of amplitudes of a plurality of (e.g., in this case, six) beams **711** from shaped-laser-beam system **604**.

FIG. **8** (including FIG. **8**A with optical unit **801** and FIG. **8**B with optical unit **802**) are schematic plan-view diagrams of optical units used in some embodiments, for optical unit **113** of FIG. **1**C.

FIG. **9**A is a diagram of a prior-art fiber **901** having an etched end facet or endcap, used in some embodiments of the present invention.

FIG. **9**B is a graph of the output beam cross-sectional intensity from prior-art fiber **901** having an etched end facet or endcap, used in some embodiments of the present invention.

FIG. **10** is a diagram of a fiber with focussing endcap **1001** having an etched end facet or endcap, used in some embodiments of the present invention.

FIG. **11** is a block diagram of a high-power-fiber-laser control system **1101** using one or more of the annularizing fiber-laser systems as described herein.

FIG. **12** is a diagram of a high-power-fiber-laser control system **1101** integrated into a naval vessel **1201**, and using one or more of the annularizing fiber-laser systems as described herein.

DESCRIPTION OF PREFERRED EMBODIMENTS

Although the following detailed description contains many specifics for the purpose of illustration, a person of ordinary skill in the art will appreciate that many variations and alterations to the following details are within the scope of the invention. Specific examples are used to illustrate particular embodiments; however, the invention described in the claims is not intended to be limited to only these examples, but rather includes the full scope of the attached claims. Accordingly, the following preferred embodiments of the invention are set forth without any loss of generality to, and without imposing limitations upon the claimed invention. Further, in the following detailed description of the preferred embodiments, reference is made to the accompanying drawings that form a part hereof, and in which are shown by way of illustration specific embodiments in which the invention may be practiced. It is understood that other embodiments may be utilized and structural changes may be made without departing from the scope of the present invention. The embodiments shown in the Figures and described here may include features that are not included in all specific embodiments. A particular embodiment may include only a subset of all of the features described, or a particular embodiment may include all of the features described.

The leading digit(s) of reference numbers appearing in the Figures generally corresponds to the Figure number in which that component is first introduced, such that the same reference number is used throughout to refer to an identical component which appears in multiple Figures. Signals and connections may be referred to by the same reference number or label, and the actual meaning will be clear from its use in the context of the description.

One problem faced by designers of high-power beam directors is that beam-expanding telescopes used in high-power beam directors typically use a Cassegrain or related design that has a central obscuration. Conventional spectral beam combining (SBC) usually produces a Gaussian spatial beam profile that would suffer significant power loss through such a telescope. For instance, if the Gaussian-shaped spatial-cross-section beam is clipped at the $1/e^2$ diameter, the central portion of the beam contains about 86 percent (~86%) of the power. If that beam goes through a Cassegrain telescope with a four-to-one (4:1) magnification, the central obscuration blocks another ~12% of the beam power. This leaves about 74 percent (~74%) of the SBC beam power transmitted through the telescope and available to propagate to the target.

The present invention provides solutions to shape the SBC laser beam output prior to the beam entering the

beam-expanding telescope and minimize losses due to the central obscuration of the beam-expanding telescope. In some embodiments, each one of a plurality of source laser beamlets is shaped to have an annular spatial power cross section before the plurality of source laser beamlets are combined in the spatial beam combiner.

FIG. **1**A is a schematic cross-sectional side view of a laser-beam director system **101** that uses a Cassegrain output optic device and an input beam that has a Gaussian spatial power profile. A Cassegrain or related design has a central obscuration associated with the primary convex mirror **160**, and a concave secondary mirror **170**. Laser source system **151** (in some embodiments, system **151** includes a plurality of fiber lasers and a spectral beam combiner that combines all of the beams from the plurality of lasers) emits an input beam **91** having a Gaussian spatial intensity profile propagates in direction **81**, reflects outwardly from mirror **160** toward mirror **170** and the collimated output beam **92** propagates in direction **83**, but has a central region **90** that has essentially no light (the optical power is zero in region **90** except for possible incidental light diffracted as the beam passes mirror **160**, or any front correction plate (not shown) or any support struts that hold mirror **160** (not shown)). In addition, the outer circumference regions **72** of the input beam (e.g., in some embodiments, the beam area beyond the beam's $1/e^2$ diameter) is clipped because it is outside the outer diameter of mirror **170** after reflecting from mirror **160** and thus misses mirror **170** and/or is blocked by mirror **170** at the outer diameter of aperture **171** (the central opening through mirror **170**), so it also has essentially no light (except for incidental diffracted light). In some embodiments, optics **110** (including mirror **160**, mirror **170** and their supporting structures) are mounted on a gimbal in order that the beam **92** can be pointed and can track a target object.

In some embodiments, the input beam **91**, having a Gaussian-shaped spatial profile, is diverging from a point-like source at location **71** (not necessarily to scale for some embodiments). The mirrors **160** and **170** are shaped to change the diverging beam into a parallel beam. In other embodiments, a spectral-beam combiner (e.g., in some embodiments, as described below for FIG. **2**) provides a collimated beam **91**, and optics **111** converts the collimated input beam **91** to a collimated output beam **92**. Thus, output beam **92** is collimated (parallel rays), has a curved single-phase wave front, and is propagating in direction labeled **82**. The outer portions (in the regions labeled **79**) of beam **92** have no light (except perhaps a very small amount of diffracted light from the edges of the optics **111**) because those portions of input beam **91** are blocked by mirror **170** as that beam passes through opening **171** and/or those portions of the beam are not reflected since they are outside the outer diameter of mirror **170**, while the center portion **78** of the output beam also has little or no light because the corresponding portions of the input beam **91** were reflected by mirror **160** back through aperture **171** and/or after reflecting from mirror **160** and then mirror **170**, those areas are blocked by mirror **160** at its outer diameter.

In some embodiments, mirror **160** and/or mirror **170** are coated with a diamond or diamond-like crystal form of carbon in order to enhance thermal uniformity across the mirror face and to enhance heat transfer away from their light-facing surfaces, in order to prevent heat-caused distortion of the mirror shape. In some embodiments, any or all of the mirrors described herein have a highly reflective multi-layer dielectric (MLD) coating such as described in U.S. Pat. No. 5,907,436 titled "Multilayer dielectric diffraction gratings" that issued May 25, 1999 to Perry et al., and which is incorporated herein by reference.

FIG. **1**B is a perspective-outline view of a laser-beam-director system **102** that uses a Cassegrain-mirror output optic device. In some embodiments, system **102** includes a gimbal mount **122** that allows pointing the output laser beam in any of a plurality of azimuth-elevation (pan-tilt) angles. In some embodiments, the output Cassegrain-mirror is quite large, up to 2-meter diameter or larger. In some various embodiments, laser-beam-director system **102** is land-based (e.g., mounted to a building), land-vehicle based (e.g., mounted to a wheeled (e.g., truck trailer or Humvee®) or tracked (e.g., M1A2 Abrams tank) vehicle), naval-vehicle based (e.g., missile destroyer, submarine, or other warship), aircraft-based, or space-based (e.g., satellite). In some various embodiments, system **102** uses the optical unit **111** of FIG. **1**A, optical unit **113** of FIG. **1**C, or the other optical units described below.

FIG. **1**C is a schematic cross-sectional side view of a laser-beam-director system **103** that uses a Cassegrain output optic device **113** (i.e., a Cassegrain optical projector that outputs a collimated annular beam, in contrast to a substantially similar Cassegrain optical telescope that collects light in the opposite direction) and an input beam **93** that has a substantially flat-topped annular spatial intensity or power profile. In some embodiments, beam **93** is a circularly symmetric (in a plane perpendicular to the direction of light propagation) annular beam. In some embodiments, the input beam optics in laser source **153** re-form the spatial profile of the combined input beams into an annular beam **93** such that optical power is moved (as opposed to being substantially blocked) from the center of the beam(s) to an annular-ring shaped beam **93** having a cross-sectional intensity or power profile that has little or no power in the center of the beam (the portion of the beam that would be blocked by the mirror **163** after reflection from mirror **173**, and/or lost after reflection from mirror **163** by propagating back through the hole in mirror **173** has been moved outward in diameter to fill the annulus), and wherein the beam spatial profile has little or no power beyond the outer diameter of mirror **173** after reflecting from mirror **163**. In some embodiments, an input beam **93** having an annular-ring-shaped flat-top beam-intensity profile propagates in direction **83**, reflects outwardly from mirror **163** toward mirror **173** and the collimated output beam **94** propagates in direction **84**, but has a central region **80** that again has essentially no light (the optical power is zero in region **80** as it leaves the optics of output optic device **113** except for possible incidental light diffracted as the beam passes mirror **163**, or any front correction plate (not shown) or any support struts that hold mirror **163** (not shown)). In addition, the light from the outer circumference regions **74** of the input beam have been moved inward (e.g., in some embodiments, the beam area beyond the beam's $1/e^2$ diameter is moved inward into the annulus) so that less power is clipped and lost (less light is outside the outer diameter of mirror **173** after reflecting from mirror **163** and thus more light hits the outer diameter of mirror **173**) and/or less light is blocked by mirror **173** at the outer diameter of aperture **171** (the central opening through mirror **173**), so less power is lost at the inner diameter of beam **94** and less light is lost at the outer diameter of beam **94**.

In some embodiments, the input beam **93** is diverging from a virtual point-like source **153** at location **73** (not necessarily to scale for some embodiments). For example, in such embodiments, the input beams impinging on the SBC mirror **240** of FIG. **2**A are diverging, and thus its annular output beam **74** would be diverging and would be used as

input beam **93** into the Cassegrain projector mirror **113**. The mirrors **163** and **173** are shaped to change the diverging beam **93** into a parallel beam **94**. In other embodiments, a spectral-beam combiner (e.g., in some embodiments, as described below for FIG. **2**) provides a collimated beam **93** (i.e., wherein beam **93** is a collimated beam), and optics **113** converts the collimated input beam **93** to a larger-diameter collimated output beam **94**. Thus, output beam **94** is collimated (parallel rays), has a substantially flat single-phase wave front, and is propagating in direction labeled **82**. The outer portions (in the regions labeled **89**) of beam **94** have no light (except perhaps a very small amount of diffracted light from the edges of the optics **113**) because those portions of input beam **91** are blocked by mirror **173** as that beam passes through opening **171** and/or those portions of the beam are not reflected since they are outside the outer diameter of mirror **173**, while the center portion **88** of the output beam also has little or no light because light of the corresponding portions of the input beam **93** were moved by the optics of source **153** into the annulus of beam **93** so less light is lost to blockage by optics **113** and/or by reflecting from mirror **163** back through aperture **171**.

In some embodiments, mirror **173** is substantially identical to mirror **170**, while in other embodiments, mirror **173** has a relatively thin shell and is air-cooled on front and back, or has a hollow core **175** (as shown in FIG. **1**C) having one or more enclosed inner voids through which a liquid coolant is circulated in order to prevent heat-caused distortion of the mirror shape. Also, in some embodiments, mirror **163** is substantially identical to mirror **160**, while in other embodiments, mirror **163** has a relatively thin shell and is air-cooled on both sides—front and back, or has a hollow core **165** through which a liquid coolant is circulated in order to prevent heat-caused distortion of the mirror shape. In some embodiments, mirror **163** and/or mirror **173** are coated with a diamond or diamond-like crystal form of carbon in order to enhance heat transfer away from their light-facing surfaces in order to prevent heat-caused distortion of the mirror shape. In some embodiments, mirror **163** and/or mirror **173** are also further, or alternatively, coated with a multilayer dielectric layer to enhance reflectivity at the wavelengths of beam **93**.

FIG. **1**D is a schematic cross-sectional side view of a laser-beam-shaper subsystem **104** that provides an input beam that has a Lagrange-Gaussian annular spatial power profile. In some embodiments, input phase plate **181** and input phase plate **182** are used to form an intermediate beam profile **96** (e.g., used in system **105** of FIG. **1**E or in place of beam **93** in system **103** of FIG. **1**C) shown in the perspective view of intensity graph **124** or the cross-section graph **125** of beam intensity next to the perspective view graph of intensity **124**. In some embodiments, the phase plates **181** and **182** are formed on opposite surfaces of a single substrate or on single faces of two separated substrates (one of which, in some embodiments, can be or is the output surface of a fiber tip) and are composed of CaF_2 (or other suitable material that transmits light of the wavelengths used by the SBC laser beam) having thicknesses of about 0 to 10 micrometers in a radial pattern having cross-sections as shown in graph **183** (for phase plate **181**) and graph **184** (for phase plate **182**). In some embodiments, such an arrangement changes a Gaussian beam cross-sectional spatial profile shape **185** into a flat-top beam with cross-sectional spatial profile **186**. In some embodiments, rather than using a phase plate **182** for the phase plate **2** (which could produce a beam shape such as shown in graph **187**), another phase plate **181** is used instead to provide a flat-topped annular beam such as beam **93** depicted in FIG. **1**C. In some embodiments, annularizing laser-beam-shaper subsystem **104** is uses as laser source **153** in FIG. **1**C or laser source **155** in FIG. **1**E to provide an annular beam into Cassegrain output optics.

FIG. **1**E is a schematic cross-sectional side view of a laser-beam director system **105** that uses a Cassegrain output optic device and an input beam that has a Lagrange-Gaussian annular spatial power profile. In some embodiments, input beam **96** combines a plurality of beams of different wavelengths to an annular-ring shaped combined beam **96** having a cross-sectional intensity or power profile that has little or no power in the center of the beam (the portion of the beam that would be blocked by the mirror **166** after reflection from mirror **176**, and/or lost after reflection from mirror **166** by propagating back through the hole in mirror **176** has been moved outward in diameter to fill the annulus), and wherein the beam spatial profile has little or no power beyond the outer diameter of mirror **176** after reflecting from mirror **166**. In some embodiments, mirror **176** is substantially identical to mirror **170** of FIG. **1**A, while in other embodiments, mirror **176** has a relatively thin shell (as shown for mirror **173** of FIG. **1**C) and with a hollow core **175** (as also shown in FIG. **1**C) having one or more enclosed inner voids through which a liquid coolant is circulated in order to prevent heat-caused distortion of the mirror shape. Also, in some embodiments, mirror **166** is substantially identical to mirror **160** of FIG. **1**A, while in other embodiments, mirror **166** has a relatively thin shell and a hollow core **165**, like mirror **163** of FIG. **1**C, through which a liquid coolant is circulated in order to prevent heat-caused distortion of the mirror shape. In some embodiments, mirror **166** and/or mirror **176** are coated with a diamond or diamond-like crystal form of carbon in order to enhance heat transfer away from their light-facing surfaces in order to prevent heat-caused distortion of the mirror shape.

FIG. **2**A is a schematic cross-sectional side view of a shaped-laser-beam spectral-beam combiner system **201** that provides an input beam **74** (e.g., input to systems **103** of FIG. **1**C or system **105** of FIG. **1**E described above) that has an annular spatial power profile. In some embodiments, a plurality of optical fibers **211**, **212**, . . . **213** deliver light from each respective one of a plurality of fiber lasers each having a slightly different wavelength, which are directed and shaped to collimated intersecting beams by transform mirror **230** to intersect, each at a slightly different angle, to multilayer dielectric (MLD) grating **240**, which combines all the beams into a single collimated beam **74**. In some embodiments, each of the plurality of input fibers **211**, **212**, . . . **213** is connected to a fiber termination unit **221** such as a ferrule having a lens (or other focusing element, such as one or more of (i.e., a single element or a combination of two or more elements selected from the group consisting of) a conical output surface (an axicon), a graded-index (GRIN) fiber element, hologram, or curved reflective surface, similar to those such as described in US Patent Publications 2011/0091155 (which issued as U.S. Pat. No. 8,755,649 on Jun. 17, 2014), 2011/0122895 or 2011/0249320 (which issued as U.S. Pat. No. 8,830,568 on Sep. 9, 2014), or U.S. Pat. No. 8,411,712 or 8,503,840, which are all incorporated herein by reference) that shapes and/or focuses the light from the plurality of input fibers **211**, **212**, . . . **213** into an annular expanding beam **76** (shown in cross section in FIG. **2**A) toward transform mirror **230**, which forms each beam into a collimated annular beam that propagates in free space to beam combiner grating **240**. In some embodiments, the amplified optical-fiber-output beams **75** each have a wave-

length (also called a channel) that is different from the wavelengths of the others of the beams **75**, and each beam **75** is emitted from a respective one of a plurality of fiber terminators **221** arranged in a row. In some embodiments, each of the fiber terminators **221** includes an endcap having a focussing element (such as a lens, or short piece of graded-index (GRIN) fiber, or curved mirror) to emit a respective diverging beam **75** (that is optionally additionally shaped by micro-optics array **221** configured to provide a controlled-beam-divergence annular shape that is matched to be collimated by mirror **230**) that is then focussed into a respective collimated annular beam **77** by mirror **230**. Each collimated annular beam **77** is oriented at a different angle relative to one another, and are positioned such that the distal end of each collimated beam **77** impinges on the same area (an oblong annular area) of diffractive grating **240**, but each at a different angle that is determined such that each different wavelength will diffract into a single output beam **74** that is the spectral-beam combination of all the wavelengths of amplified beams **75**.

In some embodiments, transform mirror **230** is or includes an astigmatic focusing element configured to reshape the intermediate beams **77** such that a height-to-width ratio of the output beam **73** is substantially one.

In some embodiments, optical-fiber-array assembly **220** is substantially similar to any one of the optical-fiber-array assemblies of U.S. Pat. No. 8,503,840 except that optical-fiber-array assembly **220** includes a plurality of lenslets (or other optical elements such as curved or conical refractive (e.g., biconvex, plano-convex, positive meniscus, negative meniscus, plano-concave, biconcave, or compound lenses) or reflective surfaces (e.g., curved mirrors that reflect and focus the output beams to annular intensity profiles, and terminators **221** optionally include free-space beam expanders, coreless-fiber beam expanders, GRIN lenses (graded-index fiber lenses), holographic, diffractive, or grating structures, or other optical elements) configured to shape (e.g., focus, collimate, diverge, or the like) individual output beams of the composite output beams **76** of optical-fiber-array assembly **220** to each have annular intensity shapes that are each collimated and each directed to output grating **240** at their own respective different angles (the different angles of each respective collimated beam **77** and the different wavelengths of each respective collimated beam **77** thus being spectral-beam combined by grating **240** into a single collimated annular combined beam **74**). In some embodiments, the output surface of each fiber terminator **221** is shaped (e.g., in some embodiments, using a cone-shaped output surface) to generate an annulus-shaped diverging beam **75**, which then goes through a beam-shaping optic **222** (e.g., in some embodiments, having a conical input and/or output surface that further shapes and directs each one of the respective beams **76** into a slightly diverging (almost collimated) beam that enlarges the diameters of the annular beams so they each intersect transform mirror **230** each centered at a small lateral displacement from the next along a line across mirror **230**. In some embodiments, transform mirror **230** then collimates each beam and directs each beam at a slightly different angle such that all the beams intersect to an annular-shaped area of MLD grating **240**, which diffracts each beam at the different appropriate angles such that all the laser beams are combined into a single annular-shaped intermediate beam **74**. In some embodiments, this beam **74** is then used as the input beam **91** of FIG. **1**A, input beam **93** of FIG. **1**C, or input beam **95** of FIG. **1**E. By acting on the individual beams **75** out of each fiber tip **221** before the diverging beams overlap, some embodiments of the present invention, using micro-optic array **222**, manipulate the beam profile into the desired annular shape. In some embodiments, annularizing laser-beam-shaper and SBC subsystem **201** is uses as laser source **153** in FIG. **1**C or laser source **155** in FIG. **1**E to provide an annular beam into Cassegrain output optics.

FIG. **2**B is a schematic cross-sectional side view of a shaped-laser-beam spectral-beam combiner system **202** that provides an input beam **74** (e.g., input to systems **103** of FIG. **1**C or system **105** of FIG. **1**E described above) that has an annular spatial power profile. In some embodiments, a plurality of optical fibers **211**, **212**, . . . **213** deliver light from each respective one of a plurality of fiber lasers each having a slightly different wavelength into annularizing assembly **210** (in some embodiments, assembly **210** includes a plurality of fiber endcaps **221** and a plurality of micro-arrayed optical elements **222** that together generate the plurality of annular beams **76** that have a controlled divergence such that, which are directed and shaped to collimated (i.e., beams each of which has parallel rays) intersecting beams (the plurality of individually parallel annular beams are each propagating at a slightly different angle towards one another) by transform mirror **230** to intersect, each at a slightly different angle, to an oval-shaped area on multi-layer dielectric (MLD) grating **240**, which combines all the beams into a single collimated annular beam **74**. In some embodiments, the collimated annular beams **77** are configured to strike grating **240** at near their Littrow angle for, e.g., the beam having the central wavelength of the plurality of wavelengths. In some embodiments, those beams having wavelengths longer than the central wavelength will hit the grating **240** on one side of the Littrow angle and those beams having wavelengths shorter than the central wavelength will hit the grating **240** on the other side of the Littrow angle. In some embodiments, annularizing laser-beam-shaper and SBC subsystem **202** is uses as laser source **153** in FIG. **1**C or laser source **155** in FIG. **1**E to provide an annular beam into Cassegrain output optics.

FIG. **2**C is a simplified schematic cross-sectional side view of a shaped-laser-beam spectral-beam combiner system **203** that provides an input beam **74** (e.g., input to systems **103** of FIG. **1**C or system **105** of FIG. **1**E described above) that has an annular spatial power profile. In some embodiments, a plurality of optical fibers **211**, **212**, . . . **213** deliver light from each respective one of a plurality of fiber lasers each having a slightly different wavelength, which are directed and shaped to collimated intersecting beams by transform mirror **230** to intersect, each at a slightly different angle, to multi-layer dielectric (MLD) grating **240**, which combines all the beams into a single collimated beam **74**, which is directed into the Cassegrain output telescope. FIG. **2**C has fewer beams than FIG. **2**B and is shortened in the left-right direction to show more detail. In some embodiments, each of the beams **76** has a cross-section intensity profile (a plane along cut line **3-376** but in a direction perpendicular to the plane of FIG. **2**C) such as graph **377** of FIG. **3**, or **125** of FIG. **1**D or **93** of FIG. **1**C. Cut line plane **2**E shown in FIG. **3** shows the direction of cross-sectional intensity graph **377**. In some embodiments, annularizing laser-beam-shaper and SBC subsystem **203** is used as laser source **153** in FIG. **1**C or laser source **155** in FIG. **1**E to provide an annular beam into Cassegrain output optics.

In some embodiments, an astigmatic beam-shaping element (a lens or other optic where rays that propagate in two perpendicular planes through the lens have different foci) is provided for each of a plurality of the fiber beamlets (e.g., **75** or **76** or **77** of FIG. **2**C). In some embodiments, the

astigmatic beam-shaping element is an astigmatic focussing lens. In some embodiments, the astigmatic beam-shaping element is merged into each conical element **222** (i.e., wherein one face of each element **222** has a cross-section in a direction perpendicular to the direction of laser-light propagation that is a non-circular oval). In some embodiments, the astigmatic beam-shaping element is merged into each end-facet of fiber terminations **221** (i.e., wherein the exit face of each element **221** has a cross-section in a direction perpendicular to the direction of propagation that is a non-circular oval). In some embodiments, mirror **230** performs the astigmatic beam-shaping (e.g., wherein the face of mirror **320** has a cross-section in a direction perpendicular to the direction of propagation that is a non-circular oval). In some embodiments, a holographic or diffractive surface is provided on element **221**, **222**, and/or **230** to provide the astigmatic beam-shaping.

In some embodiments of all the configurations of the present invention, the output grating **240** is a blazed grating (wherein the grating lines have a triangular (sawtooth) shaped cross section, with the faces of the grooves tilted at the so-called blaze angle with respect to the general surface of the grating, and the grating is used in the so-called Littrow configuration for a central one of the plurality of wavelengths that are spectral-beam combined. The Littrow configuration is a special geometry in which diffraction angle and incidence angle are identical. For a reflection grating, this means that the diffracted beam is back-reflected into the direction of the incident beam. In some embodiments, the blaze angle of grating **240** is chosen to maximize diffractive efficiency at the central one of the plurality of wavelengths.

FIG. **2**D is a schematic cross-sectional side view of another shaped-laser-beam spectral-beam combiner system **204** that provides an input beam (e.g., for FIG. **1**C or FIG. **1**E) that has an annular spatial power profile. In some embodiments, shaped-laser-beam spectral-beam combiner system **204** is similar to system **203** of FIG. **2**C, except that the plurality of axicons **222** of system **203** are optionally omitted from system **204**, and instead of or in addition to the plurality of axicons **222**, a single output axicon **222**A is used to collimate the output beam **74**, which exits to the right in this figure with an annular cross-sectional intensity (e.g., such as annular intensity shape shown in cross-sectional view **93** of FIG. **1**C; or annular intensity shape shown in perspective view **124** and cross-sectional view **125** of FIG. **1**D; or perspective view **376**, cross-sectional view **377** and end-on plan view **378** of FIG. **3**). In some embodiments, output beam **74** of FIG. **2**D is used as input beam **93** travelling in direction **83** into Cassegrain optics **113** (i.e., in some embodiments, annularizing laser-beam-shaper and SBC subsystem **201** is uses as laser source **153** in FIG. **1**C or laser source **155** in FIG. **1**E to provide an annular beam into Cassegrain output optics).

FIG. **3** is a schematic diagram of a shaped-laser-beam system **301** that provides an input beam that has an annular spatial power profile (the cross-section profile graph **375** shows one such profile). In some embodiments, a Gaussian input beam, shown as a perspective shape **374** and cross-sectional shape of graph **375**, is passed through a designed phase plate **320** that spatially transforms substantially all of the input energy of Gaussian beam **374** into a flat-topped annular beam shape shown in perspective as **376** and in cross-sectional shape of graph **377**. In some embodiments, this beam having cross-sectional intensity profile of graph **377** is then used as the input beam **91** of FIG. **1**A, input beam **93** of FIG. **1**C, or input beam **95** of FIG. **1**E.

FIG. **4**A is a schematic perspective-view diagram of a shaped-laser-beam system **401** that uses a plurality of stepped spiral phase plate areas **420** to provide a plurality of shaped beams, each of which has an annular spatial power profile **477**. In some embodiments, a plurality of stepped spiral phase plate areas **420** are assembled from initially separate pieces placed one next to another, while in other embodiments, a plurality of stepped spiral phase plate areas **420** are formed as adjacent surface formations on a single substrate (e.g., in some embodiments, using photolithography, ion milling, or the like, to simultaneously form the plurality of stepped spiral phase plate areas **420**, which can allow precise registration of the plurality of stepped spiral phase plate areas **420** relative to one another).

FIG. **4**B is a schematic perspective-view diagram of a shaped-laser-beam system **402** that uses a smoothed spiral phase plate area **422** to provide a shaped input beam that has an annular spatial power profile **477**. In some embodiments, each smoothed spiral phase plate area **422** is similar to a corresponding stepped spiral phase plate area **420** described above, but with a smooth continuous spiral ramp rather than steps, which may eliminate any wavelength sensitivity that might otherwise result from a stepped structure. In some embodiments, a plurality of smoothed spiral phase plate areas **422** are assembled from initially separate pieces placed one next to another, while in other embodiments, a plurality of smoothed spiral phase plate areas **422** are formed as adjacent surface formations on a single substrate (e.g., in some embodiments, using photolithography, ion milling, or the like, to simultaneously form the plurality of smoothed spiral phase plate areas **422**, which can allow precise registration of the plurality of smoothed spiral phase plate areas **422** relative to one another).

FIG. **4**C is a schematic side-view diagram of a shaped-laser-beam system **402** that uses a smoothed spiral phase plate **422** to provide a shaped input beam that has an annular spatial power profile **477**.

FIG. **4**D is another schematic side-view diagram (from a viewpoint Y 90 degrees relative to that of FIG. **4**C) of a shaped-laser-beam system **402** that uses a smoothed spiral phase plate **422** to provide a shaped input beam that has an annular spatial power profile **477**.

FIG. **4**E is a schematic plan view of an optical-fiber-array assembly **405**. In some embodiments, assembly **405** is used in place of annularizing optics **210** in SBC system **202** of FIG. **2**B. In some embodiments, the present invention includes a plurality of optic fibers **430** butt-welded to a transparent base plate **410**. In some embodiments, each one of the plurality of optical fibers **430** is attached to a first input surface **411** of base plate **410** (as described in FIG. 3D of U.S. Pat. No. 8,503,840 to Hu et al., which is assigned to the owner of the present application, and which is incorporated herein by reference). In some embodiments, base plate **410** includes a top major face **416** (e.g., in some embodiments, perpendicular to input face **411**). In some other embodiments, fibers **430** are glued to first surface **411**. In some other embodiments, fibers **430** are fused, soldered, or otherwise attached to first surface **411**. In some embodiments, fibers **430** are attached to first surface **411** by laser welding, butt welding, soldering, or the like. In some embodiments, optical signals transmitted through the plurality **435** of optical fibers **430** are transmitted into base plate **410** at first surface **411**, transmitted through base plate **410**, and then emitted as a composite output beam **477** (which, in some embodiments, includes a plurality of annular diverging annular output beams **465**) from base plate **410** at a second surface **412** of base plate **410**. In some embodiments, second

surface **412** is flat except for spiral phase plate areas **415** (which, in some embodiments, are stepped spiral phase plate areas **401** as shown in FIG. **4**A or in other embodiments, smoothed spiral phase plate areas **402** as shown in FIG. **4**B). In some embodiments, an anti-reflective (AR)-coating is applied to second surface **412** and/or spiral phase plate areas **415** to improve light transmission through base plate **410** (in some such embodiments, first surface **411** is not AR-coated, since fusing the fibers **430** to the plate **410** eliminates index-of-refraction interfaces).

In some embodiments, optical-fiber-array assembly **405** is substantially similar to shaped-laser-beam system **401** of FIG. **4**A or **402** of FIG. **4**B, except that optical-fiber-array assembly **405** includes a plurality **430** of optical fibers **430**.**1**-**430**.*n* that are butt welded or otherwise affixed to entry surface **411** of transparent base plate **410**. In some embodiments, system **405** includes a plurality of (two or more) optical fibers **430**.**1**-**403**.*n* that are fused to base plate **410**, which includes annularizing optics **415**, and one or more assemblies **405** are used in place of annularizing optics **220** of FIG. **2**A or annularizing optics **210** of FIG. **2**B. System **405** receives a plurality of regular Gaussian-spatial-shaped laser beams **431**, one from the end of the core of each optical fiber **430**, into transparent base plate **410**, where the beams expand (diverge) in the coreless transparent base plate **416**, and are reshaped to a plurality of annular beams **465** (by each respective phase plate area **415** (e.g., a stepped phase plate such as **420** of FIG. **4**A or a smooth phase plate such as **422** of FIG. **4**B) that continue to diverge and propagate in direction **477** (in a manner such as shown and described in FIG. **2**B in place of beams **76**), such that the beams strike a transform mirror **230** that changes the beams from diverging annular beams **76** into collimated annular beams that then intersect output grating **240**. In other embodiments of the invention similar to assembly **405**, the phase plate areas **415** are replaced by conical-shaped optical members **416** as shown in FIG. **4**F (axicons, or micro-axicons), or in other embodiments, by holographic or grating members **417** as shown in FIG. **4**G**1**. In some embodiments, a plurality of optical-fiber-array assemblies **405** are used in place of annularizing optics **220** of FIG. **2**A or annularizing optics **210** of FIG. **2**B, and in some such embodiments, some or all of the base plates **410** have only a single input fiber **430** fused to their input face **411** and a single annularizing phase plate **415** on the output face **412**.

In some embodiments, base plate **410** is hollow, having a relatively thin wall along input face **411** and a relatively thin wall along output face **412**, and a hollow cavity space therebetween. In some embodiments, the hollow cavity has anti-reflection coatings on the inner faces of the walls along input face **411** and output face **412**, and the hollow cavity can provide a beam-expansion space that absorbs less laser light than would a completely solid glass base plate **410**. In some embodiments, the hollow cavity has annularizing and/or focussing elements on the inner faces of the walls along input face **411** and/or output face **412** to shape the beams inside the hollow base plate **410** to provide the desired annular output beams **460**.

FIG. **4**F is a schematic plan view of an optical-fiber-array assembly **406**. In some embodiments, optical-fiber-array assembly **406** is substantially similar to shaped-laser-beam system **405** of FIG. **4**E, but having a plurality of conical output optics **416** (axicons, or micro-axicons) as shown in FIG. **4**F rather than having a plurality of spiral phase plate areas **415** on its output side **412** (e.g., such as shown in FIG. **4**E) or holographic or grating shaping areas **417** (such as shown in FIG. **4**G)). In some embodiments, optical-fiber-array assembly **406** includes a plurality of lenslets (e.g., in some embodiments, a GRIN lens-section **419** is fused at one of each of the GRIN's ends to the ends of optical fibers **430**, with the GRIN's other ends fused to the input face **411** of base plate **410** (as described in FIG. 3C2 of U.S. Pat. No. 8,503,840 to Hu et al., which is assigned to the owner of the present application, and which is incorporated herein by reference). In some embodiments, one or more optical-fiber-array assemblies **406** are used in place of annularizing optics **220** of FIG. **2**A or annularizing optics **210** of FIG. **2**B, and in some such embodiments, some or all of the base plates **410** have only a single input fiber **430** and GRIN lens **419** fused to their input face **411** and a single annularizing axicon **416** on the output face **412**. In some embodiments, the GRIN lens(es) **419** are fused to the output face **412** between base plate **410** and the conical axicon(s) **416**. In some embodiments, some or all of the conical axicon(s) **416** are replaced by phase plates **415** (as described for FIG. **4**E) and/or by holographic annularizing optics **517** as described below for FIG. **5**A.

FIG. **5**A is a schematic plan view of an optical-fiber-array assembly **501**. In some embodiments, optical-fiber-array assembly **501** is substantially similar to shaped-laser-beam system **406** of FIG. **4**F on its input side (having a plurality of optical fibers **430** each fused to a GRIN lens which is in turn fused to base plate **510**), however, in some embodiments, the base plate **510** of optical-fiber-array assembly **501** includes a concave-shaped output face **512** shaped and configured to cause each beam to exit face **512** propagating at a different intersecting angle such that the beams **560** propagate generally in intersecting direction **577**. In some embodiments, each holographic grating element **517** is generated by calculating a microlens-array surface (e.g., such as described in U.S. Pat. No. 4,813,762 to Leger et al. titled "Coherent beam combining of lasers using microlenses and diffractive coupling", which is incorporated herein by reference), and/or calculating (e.g., in a manner similar to that described in U.S. Pat. No. 5,454,004 to Leger titled "Phase grating and mode-selecting mirror for a laser", which is incorporated herein by reference. Similar to U.S. Pat. No. 5,454,004, some embodiments of the present invention use a method for making a custom diffractive surface that includes: (a) choosing a specified annular beam mode profile a_i (x,y) that will suit need of a designer, (b) calculating the mode profile b(x',y') which is a value of the specified a_i (x,y) that is propagated from the output surface of the diffractive area and (c) calculating grating transmittance t(x',y') which provides a phase conjugate of b(x',y')). In some embodiments, output face **512** has a plurality of holographic or grating beam-shaping areas **517** that shape the output beams into annular beams **560**. In some embodiments, each annular beam **560** individually diverges. In some embodiments, other optical elements are also provided on the output face **512** such as curved refractive (e.g., biconvex, plano-convex, positive meniscus, negative meniscus, plano-concave, biconcave, conical or compound lenses) or reflective surfaces (e.g., curved mirrors that reflect and focus the output beams through the top surface **516**, GRIN lenses (graded-index fiber lenses), holographic, diffractive, or grating structures to focus or collimate the beams **560**, or other optical elements) **557** configured to shape (e.g., focus, collimate, diverge, or the like) individual output beams of the composite output beam **577** of optical-fiber-array assembly **501**. For example, in some embodiments, individual optical signals are transmitted through optical-fiber-array assembly **501** such that the plurality of output beams associated with the individual optical signals are emitted as diverging annu-

lar output beams **560** from optical-fiber-array assembly **501**. In some embodiments, input-side lenslets **419** are further configured to reduce aberration. In some embodiments, output gratings **517** are formed separately from base plate **510** and then later affixed to second surface **512** of base plate **510** by fusing, butt (or other) welding, gluing or the like. In other embodiments, lenslets **517** are formed as part of base plate **510** (e.g., by e-beam writing of the shapes on a photoresist applied to concave face **512**, and then using conventional lithographic etching and applying additional photoresist and aligning of further e-beam writing of subsequent diffractive shapes to provide a stepped diffractive grating as described by Leger in U.S. Pat. No. 5,454,004.

One method for fabricating lenslets usable with the present invention is described in U.S. Pat. No. 7,128,943 (hereinafter, "Djeu"), titled "Methods for fabricating lenses at the end of optical fibers in the far field of the fiber aperture," issued Oct. 31, 2006, and incorporated herein by reference. Djeu describe a microlens affixed in the far field of an optical fiber to spatially transform a beam either entering or exiting the fiber. In a first embodiment, a droplet of photo polymer is placed on the end of an optical fiber and the fiber is spun to create an artificial gravity. The droplet is cured by UV radiation during the spinning. In some embodiments, the method described by Djeu is modified such that lenslets are suitably formed on surface **512** of base plate **510**, wherein the lenslets provide the annularizing and the focussing of the beams **560**.

In some embodiments, a plurality of lenslets **419** located between the ends of each of a plurality of fibers **430** are formed using very short sections of focussing GRIN fibers fused to the light-output ends of the fibers as described in United States Patent Application Publication 2011/0249321 by Savage-Leuchs et al. titled "Signal and pump mode-field adaptor for double-clad fibers and associated method," which is assigned to the owner of the present application, and is incorporated herein by reference. Patent Publication 2011/0249321 describes optical fibers, wherein the opposite ends of the very short sections of GRIN lenslets **419** are fused or glued to the base plates as described herein, and GRIN lenslets **419** perform a focussing function on the input light going into base plate **510**. In some embodiments, very short sections of focussing GRIN fibers (not shown) are fused to the output face **512** of base plate **510**, in addition to the diffractive gratings or holograms **517** shown in FIG. **5**A, and perform a focussing function on the output light. In some embodiments, the diffraction gratings or holograms **517** also a focussing function on the output light. In some embodiments, the very short sections of input focussing GRIN fibers **419** are omitted and the fibers **430** are fused directly to the input face **511** of base plate **510** (as described for FIG. **4**E).

In some embodiments, diffractive gratings or holograms **517** are formed on the ends of fibers **430** by a high-power laser (e.g., in some embodiments, a carbon dioxide (CO_2) laser) in a process such as used by OZ Optics, 219 Westbrook Road, Ottawa, Ontario, KOA 1LO, Canada, to form tapered and lensed fibers (www.ozoptics.com/ALLNEW_PDF/DTS0080.pdf).

FIG. **5**B is a schematic plan view of an optical-fiber-array assembly **502**. In some embodiments, optical-fiber-array assembly **502** includes a hollow base plate **520** that has an internal cavity **529** that is either filled with air, helium or some other gas, or in other embodiments, has a vacuum. In some embodiments, optical-fiber-array assembly **502** has a relatively thin wall **522** having curved input face **521** on its input side (in some embodiments, having a plurality **430** of optical fibers **430**.1-**430**.*n* each fused to a GRIN lens **419** which is in turn fused to wall **522** of base plate **520**, or in other embodiments, omitting the GRIN lens and having fibers **430** fused to input wall **522** directly), and a relatively thin wall **524** having curved output face **522** on its output side (in some embodiments, having a plurality of focussing elements **526** (shown here as lenslets, but in other embodiments, using diffractive gratings or holographic focussing elements) on the output wall **524** to collimate the output beams **578** each into a collimated annular beam, wherein the annular beams all impinge onto a single annular area on SBC mirror **240**). In other embodiments, the output wall **524** itself is curved to climate the diverging annular beams created by the respective annularizing elements **527**. In some embodiments, the base plate **510** of optical-fiber-array assembly **501** includes a concave-shaped output face **512** shaped and configured to cause each beam to exit face **512** propagating at a different intersecting angle such that the plurality of beams **560** (i.e., the individual beams **560**.1-**560**.*n*) propagate generally in intersecting direction **578**. The SBC output grating spectrally combines the beams each having a different wavelength and different impingement angle into a single SBC annular output beam **74** that is output through a Cassegrain projector (such as Cassegrain projector optics **111** of FIG. **1**A or Cassegrain projector optics **113** of FIG. **1**C). Thus, optical-fiber-array assembly **502** combines a plurality of beams, each having a Gaussian shape **431** from delivery fibers **430** into an annular SBC beam **74**.

FIG. **6**A is a schematic perspective view of an optical-fiber-array assembly **601**. In some embodiments, optical-fiber-array assembly **601** includes a hollow base plate **610** and a plurality of optical fibers **630** (e.g., in some embodiments, optical fiber **630**.1 through **630**.N) that are attached to a first surface **611** of base plate **610**. In some embodiments, base plate **610** includes a top major face **616**. In some embodiments, optical signals transmitted through the plurality of optical fibers **630** are transmitted into base plate **610** at first surface **611**, transmitted through base plate **610**, and then emitted as a composite output beam **677** from base plate **610** at a second surface **612** of base plate **610**. In some embodiments, base plate **610** includes a hollow plate **660** having an interior space (in some embodiments, the interior space of hollow plate **660** is air-filled, gas-filled or has a vacuum). Hollow cavity **660** allows the optical signals transmitted through the plurality **630** of optical fibers to expand within base plate **610** without having to go through as much material (e.g., glass), which therefore leads to less power absorption. In some embodiments, the plurality of optical fibers **630** include a plurality of hollow-core photonic-bandgap fibers, and in some such embodiments, the plurality of hollow-core fibers **630** are butt-welded to a corresponding plurality of capillary holes (e.g., in some embodiments, capillary holes as described in U.S. Pat. No. 8,503,840 to Hu et al.) through first surface **611** such that the center of an individual fiber **630** lines up with the center of a corresponding capillary hole, such that the capillary holes act as beam-expanding endcaps. In some embodiments, each of the capillary holes terminates at one of the plurality of lenslets **652**, which, in some embodiments, are antireflective coated. In some other embodiments, capillary holes **631** connect directly to hollow cavity **660** such that optical signals transmitted through the plurality of optical fibers **630** are transmitted through capillary holes **631** and into hollow cavity **660** without a glass interface. In some embodiments, the output wall having output face **612** has a plurality **650** of

conical axicons **416** (see description of FIG. **4**F) that reshape the Gaussian input beams into a plurality of annular output beams **677**.

FIG. **6**B is a schematic plan view of optical-fiber-array assembly **601**. In some embodiments, the axicons **416** are replaced by spiral phase plates **415** or diffractive gratings **517** described above. In some embodiments, the plurality of lenslets **626** are omitted and replaced by GRIN lenses fused between the ends of fibers **630** and input wall **621**. In other embodiments, the axicons **416** or spiral phase plates **415** or diffractive gratings **517** are located on the inner face of the input wall **622** (in the place of lenslets **626**). In some embodiments, the annular output beams **653** are individually diverging or, in other embodiments, converging, due to the focussing elements **626** (and/or **628** shown in FIG. **6**C).

FIG. **6**C is a schematic plan view of optical-fiber-array assembly **603**. In some embodiments, base plate **620** has a plurality of focussing elements **626**, **628** on the inner walls of cavity **660** (and/or focussing elements on the outside face(s) of base plate **620** (e.g., GRIN elements **419** between optical fibers **630** and input face **611**)). In some embodiments, lenslets **628** (or other focussing elements) are placed on the inside and/or outside of the output wall **622** having the output face **612**. In some embodiments, the axicons **416** as shown in FIG. **6**A (or phase plates **415** as shown in FIG. **4**E or diffractive gratings **517** as shown in FIG. **5**A) are located on the outside of the output wall **622**. In some embodiments, the axicons **416** (or phase plates **415** or diffractive gratings **517**) are instead located on the inside of the input wall **621**. In some embodiments, the annular output beams **653** are individually collimated.

FIG. **6**D is a schematic input-end (elevational) view of optical-fiber-array assembly **604**. In some embodiments, a plurality of fibers **630** are fused in a two-dimensional array to the input face **611** of base plate **610** or **620**. In some embodiments, a triangle array **641**, square array **642**, hexagonal array **643** or other polygon array of groups of fibers **630** is fused around each of a plurality of circular central areas **639** not having an optical fiber. In some embodiments, a plurality of groups each having the same number of fibers (e.g., arrays **643**) are used. In other embodiments, a plurality of groups each having different numbers of fibers (e.g., arrays **641**, **642**, and the two **643** arrays) are used. In some embodiments, both fibers **630** of a respective pair (e.g., the two fibers **630**.*j*, the two fibers **630**.*m*, or the two fibers **630**.*k*) having the same horizontal spacing from an end **619** are configured to be driven by and deliver identical versions of respective laser signals (e.g., having the same wavelength and phase front, such as high-power laser signals driven in a master-oscillator power amplifier (MOPA) system). In some embodiments, all of the fibers of a single group (e.g., both fibers **630**.*j*, both fibers **630**.*m*, and both fibers **630**.*k*) are driven by MOPA laser signals all driven from a single source. In some such embodiments, a plurality of the deliver fibers **630** of each group is attached to and controlled by a fiber stretcher or other such device that will controllably delay some of the laser signals from a single group (e.g., each group **643**) such that all of the signals from that group arrive with the same phase in the output beam **74** (see FIG. **1**C (input beam **93**) which, in some embodiments, comes from output beam **74** of SBC system **202** of FIG. **2**B, that uses the output beams from device **601**, **603** or **604**). In some embodiments, the grouped-fibers configuration described for FIG. **6**D is used in either of the systems **601** or **602** of FIG. **6**A or **6**C, but wherein the annularizing elements are omitted and instead a circular arrangement of Gaussian beams (see FIG. **7**A-**7**D).

FIG. **7**A is a schematic perspective-view diagram of amplitudes of a plurality of (e.g., in this case, six) beams **711** from a shaped-laser-beam system **604** that uses a plurality of Gaussian emitters to provide a shaped input beam that has the plurality of Gaussian beams arranged around a low-power central region in somewhat annular spatial power profile **701**. In some embodiments, the bottom outer circumference represents the 1/e level of power relative to the maximum power of each beam.

FIG. **7**B is a schematic plan-view diagram of amplitudes of a plurality of (e.g., in this case, six) beams **711** from a shaped-laser-beam system **604** that uses a plurality of Gaussian emitters to provide a shaped input beam that has the plurality of Gaussian beams arranged around a low-power central region in somewhat annular spatial power profile **701**. In some embodiments, the outer circumference of each circularly symmetric represents the 1/e level of power relative to the maximum power of each beam.

FIG. **7**C is a schematic diagram of amplitudes of a plurality of beams **711** (twelve beams) from shaped-laser-beam system **604** that uses a plurality of Gaussian emitters to provide a shaped input beam that has an annular spatial power profile **710**.

FIG. **7**D is a schematic plan-view diagram of amplitudes of a plurality of (e.g., in this case, six) beams **711** from shaped-laser-beam system **604**.

FIG. **8** (including FIG. **8**A with optical unit **801** and FIG. **8**B with optical unit **802**) are schematic plan-view diagrams of optical units used in some embodiments, for optical unit **113** of FIG. **1**C. In some embodiments, each fiber **830** has an endcap **821** that expands the output beam from the fiber and has a conical output facet that forms a respective annular beamlet **75**. In some embodiments, a plurality of conical optical members **822**/**823** then reforms these into annular beamlets **76** that propagate parallel to one another. In some embodiments, annular beamlets **76** are collimated. In other embodiments, annular beamlets **76** are slightly diverging. In some embodiments, the annular beamlets intersect a transform mirror **230** as shown in FIG. **2**A and FIG. **2**B, which directs each beam at a different angle towards output grating **240**, which forms a single annular output beam by spectral beam combining the various beams of differing wavelengths. In some embodiments, the plurality of optical fibers is arranged in a linear array, and optics **810** include micro-axicon optics that form the parallel annular output beams **76**.

FIG. **9**A is a diagram of a prior-art fiber **901** having an etched end facet or endcap, used in some embodiments of the present invention. In some embodiments, fiber **901** is as described by Mayel et al. in Photonic Sensors (2011) Vol. 1 No. 2: 187-198, DOI: 10.1007/s13320-011-0028-1. In some embodiments, fiber **901** converts a Gaussian beam profile from the core of the fiber to a flat top beam profile with a uniform intensity distribution. A flat-top beam with intensity variation of approx. 5% and (flat top diameter)-to-(spot diameter) ratio of 67% has been achieved. In some embodiments, this device changes the beam shape from a Gaussian spatial-intensity profile to a donut (annular) spatial-intensity profile shape by moving the observation plane; in some embodiments, a focussing or collimating optical element (e.g., lens) is placed at the observation plane to collimate the annular beam. In some embodiments, this fiber **901** along with a collimating optical element according to the present invention is used to form each of the plurality of annular beams **76** used in assembly **202** of FIG. **2**B.

FIG. **9**B is a graph of the output beam cross-sectional intensity from prior-art fiber **901** having an etched end facet or endcap, used in some embodiments of the present invention.

FIG. **10** is a diagram of a fiber with focussing endcap **1001** having an etched end facet or endcap, used in some embodiments of the present invention. In some embodiments, optical fiber **1011** includes a tip with an etched recess similar to fiber **901** as described above; however fiber **1011** is fused to an endcap **1012** (in some embodiments, a hollow endcap with a lens **1013** fused at the right-hand end; in other embodiments, a hollow base plate (such as base plate **610** of FIG. **6**A, and having a plurality of hollow capillaries (e.g., one per fiber **1011**))), which includes focussing or collimating optics to output annular beam **76**. In some embodiments, lens **1013** is replaced by an axicon element **1013'** (not shown, but similar to element **222**A of FIG. **2**D described above) with its conical face facing left so that the diverging beam exiting the fiber at the right-hand exit facet (with its conical indent) becomes collimated by axicon element **1013'**). In some embodiments, a plurality of such fibers with focussing endcaps or fused to a hollow base plate **610**, is used for assembly **210** of FIG. **2**B or assembly **220** FIG. **2**A.

FIG. **11** is a block diagram of a high-power-fiber-laser system **1101** using one or more of the annularizing fiber-laser systems as described herein. FIG. **11** is a block diagram of a high-power spectral-beam-combining (SBC)-fiber-laser control system in an overall product **1101** (e.g., a vehicle such as a naval vessel as shown here (such as a frigate, destroyer or aircraft carrier), a land vehicle (such as a tank or remotely-operated robotic vehicle), airframe (such as a helicopter or jet airplane), or facility (such as an airport or bunker)) using one or more of the annularizing SBC-fiber-laser systems as described herein. In some embodiments, system **1101** includes the vehicle, airframe, vessel or facility enclosure **1109** and its other contents (e.g., engines and control systems), one or more battery and/or electrical power supplies **1118**, a laser controller **1112** that provides the control of wavelength, pulse timing and duration for embodiments using pulse signals (other embodiments use CW (continuous wave) signal beams), output-power control, direction control of the output beam and the like, an imaging calculation microprocessor and/or circuitry **1126** that obtains an image signal from imager **1128** and calculates such data as target location and velocity that is then delivered to laser controller **1112**, signal processors **1120** that receive wavelength-determination signals and/or directional-drift signals from the SBC (spectral-beam combiner) module **1117** (with its associated wavelength-, beam-off-axis and beam-off-angle detection sensors and circuitry, as described in U.S. Pat. No. 7,199,924 issued Apr. 3, 2007 to Andrew J. W. Brown et al., titled "Apparatus and method for spectral-beam combining of high-power fiber lasers," which is incorporated herein by reference), and that delivers wavelength-correction control data to laser controller **1112**. In some embodiments, laser controller **1112** generates the control and power signals that are based at least in part on forward-tap signals and backward-tap signals (e.g., in some embodiments, as described in U.S. Patent Publication No. US 2011/0091155 of Yilmaz et al., titled "In-Line Forward/Backward Fiber-Optic Signal Analyzer," which is incorporated herein by reference). In some embodiments, laser controller **1112** generates the control and power signals that are sent to fiber-laser module **1100**, which then delivers high-power optical beams at a plurality of different wavelengths to annularizer optics **1114** and SBC **1116**, which then combines the laser beams into a single multi-wavelength annular output laser SBC beam **99** (e.g., such as beam **93** of FIG. **1**C, beam **96** of FIG. **1**E, beam **74** of FIG. **2**A, beam **74** of FIG. **2**B, beam **74** of FIG. **2**C, beam **74** of FIG. **2**D, beam **376** of FIG. **3**, or beam **74** of FIG. **5**B, or other like beams of the present invention) that goes through Cassegrain optics **1113**, which collimates and directs the output beam **94** toward target **70** (e.g., a hostile aircraft or spacecraft), according to the control information that was generated based on image information obtained from imager **1126**. In some embodiments, high-power-fiber-laser system **1101** includes a laser system **1111** that supplies an annular laser beam to command-and-control targeting output optics and control system **1113**, which obtains a target image using imager **1128**. The target image is analyzed by target-identifier-and-locater system **1126**, and the results go (a) to beam-output controller **1124** that drives the beam-pointer unit **1122**, and (b) to signal processors **1120** that drive the laser controller **1112** to generate the laser power when needed. In some embodiments, system **1101** is part of, and used as an element of, a directed-energy (DE) weapon carried by a vehicle **1109** (such as a tank, an aircraft, or a naval vessel **1201** such as illustrated in FIG. **12**).

Accordingly, some embodiments of the present invention further include a vehicle **1109**; an electrical power supply **1119** mounted to vehicle **1109**; a laser controller **1112** mounted to vehicle **1109** and operatively coupled to receive electrical power from electrical power supply **1119** and operably coupled to power and control the plurality of laser sources **1110**; a Cassegrain projector **1113** mounted to vehicle **1109** and operatively coupled to receive the first annular spectrally combined beam **99** and configured to form a collimated second annular output beam **94** from the optical energy of the first annular spectrally combined beam **99**; and a beam-direction controller (**1122**, **1124** and **1126**) operably coupled to Cassegrain projector **1113** and operable to direct annular output beam **94** in one of a plurality of different possible directions relative to vehicle **1109**.

FIG. **12** is a diagram of a high-power-fiber-laser system **1101** integrated into a naval vessel **1201**, and using one or more of the annularizing fiber-laser systems as described herein. In some embodiments, high-power-fiber-laser system **1101** includes a laser system **1111** that supplies an annular laser beam to command-and-control targeting output optics and control system **1113**.

In some embodiments, the present invention provides a system for combining a plurality of laser beamlets to form a single annular beam using spectral beam combination. This system includes a plurality of laser sources that emit a plurality of beamlets, wherein each one of the plurality of beamlets has a different wavelength; a beam annularizer that includes a plurality of optical units arranged to receive the beamlets, and configured to convert each beamlet into a respective annular beam that has an annular cross-sectional power profile; a beam-intersection transform element configured to point each respective one of the plurality of annular beams in an angular intersection arrangement toward a first location; and a spectral beam combiner at the first location configured to combine the plurality of wavelengths in the plurality of annular beams into a first annular spectrally combined beam.

In some embodiments, the beam-intersection transform element is also configured to collimate each of the intersecting beams.

In some embodiments, the first annular combined beam is a collimated beam. In some such embodiments, the system further includes a Cassegrain projector operatively coupled to receive the first annular combined collimated beam and

configured to form a second collimated annular output beam from the optical energy of the first annular combined collimated beam.

In some embodiments of the apparatus, the first annular spectrally combined beam is a diverging annular beam. In some such embodiments, the system further includes a Cassegrain projector operatively coupled to receive the first annular combined diverging beam and configured to form a second collimated annular output beam from the optical energy of the first annular combined diverging beam.

Some embodiments of the apparatus further include a vehicle; an electrical power supply mounted to the vehicle; a laser controller mounted to the vehicle and operatively coupled to receive electrical power from the electrical power supply and operably coupled to power and control the plurality of laser sources; a Cassegrain projector mounted to the vehicle and operatively coupled to receive the first annular spectrally combined beam and configured to form a collimated second annular output beam from the optical energy of the first annular spectrally combined beam; and a beam-direction controller operably coupled to the Cassegrain projector and operable to direct the second annular output beam in one of a plurality of different possible directions relative to the vehicle.

In some embodiments of the system, the plurality of laser sources includes a plurality of optical-fiber lasers. In some embodiments, the plurality of laser sources includes at least about ten (10) laser fibers arranged in a one-dimensional linear array (i.e., where the fiber output laser signals **75** are along a single line, such as shown in FIG. **2**C). In some embodiments, the plurality of laser sources includes at least about twenty (20) laser fibers arranged in a two-dimensional array (i.e., where the fiber output laser signals (such as reference **75** of FIG. **2**C) are emitted from fibers arranged spaced along two dimensions such as shown by reference numbers **641**, **642** or **643** in FIG. **6**D). In some embodiments, the plurality of laser sources includes at least about one-hundred (100) laser fibers arranged in a one-dimensional linear array (i.e., where the fiber output laser signals **75** are along a single line, such as shown in FIG. **2**C). In some embodiments, the plurality of laser sources includes at least about one-hundred (100) laser fibers arranged in a two-dimensional array (i.e., where the fiber output laser signals **75** are emitted from fibers arranged spaced along two dimensions such as shown in FIG. **6**D). As used herein, each one of the plurality of laser sources outputs its laser light in what is called "a channel," the channel having a spectral linewidth that can be expressed as a difference in wavelengths between full-width-half-maximum (FWHM) points in its spectrum, or as the linewidth expressed as the equivalent FWHM difference in frequencies. In some embodiments, each one of the plurality of laser sources has an optical linewidth of no more than about 100 MHz. In some embodiments, each one of the plurality of laser sources has an optical linewidth of no more than about 500 MHz. In some embodiments, each one of the plurality of laser sources has an optical linewidth of no more than about 1 GHz. In some embodiments, each one of the plurality of laser sources has an optical linewidth of about 1 GHz. In some embodiments, each one of the plurality of laser sources has an optical linewidth of about 3 GHz. In some embodiments, each one of the plurality of laser sources has an optical linewidth of no more than about 5 GHz. In some embodiments, each one of the plurality of laser sources has an optical linewidth of about 5 GHz. In some embodiments, each one of the plurality of laser sources has an optical linewidth of no more than about 10 GHz. In some embodiments, each one of the plurality of laser sources has an optical linewidth of about 10 GHz. In some embodiments, each one of the plurality of laser sources has an optical linewidth of no more than about 20 GHz. In some embodiments, each one of the plurality of laser sources has an optical linewidth of about 20 GHz. In some embodiments, each one of the plurality of laser sources has an optical linewidth of no more than about 30 GHz. In some embodiments, each one of the plurality of laser sources has an optical linewidth of about 30 GHz. In some embodiments, each one of the plurality of laser sources has an optical linewidth of no more than about 50 GHz. In some embodiments, each one of the plurality of laser sources has an optical linewidth of about 50 GHz. In some embodiments, each one of the plurality of laser sources has an optical linewidth of no more than about 100 GHz. In some embodiments, each one of the plurality of laser sources has an optical linewidth of about 100 GHz. In some embodiments, systems of the present invention where each channel has a linewidth of about 100 GHz, it is easier to get high power from each fiber laser, but more difficult to combine the channels in the SBC unit (called "good for laser, poor for SBC"); in contrast, in some systems of the present invention where each channel has a linewidth of about 100 MHz, it is harder to obtain very high power (i.e., 10,000 watts or more) from each of the plurality of fiber lasers, but spectral beam combining such narrow linewidths is easier (called "poor for laser, good for SBC"); accordingly, some embodiments use fiber laser sources having linewidths between 1 GHz and 25 GHZ, inclusive. In some embodiments, each channel has an output power of at least 1,000 W. In some embodiments, each channel has an output power of at least 10,000 W. In some embodiments, each channel has an output power of at least 100,000 W. In some embodiments, the second collimated annular output beam has an output power of at least 10,000 W. In some embodiments, the second collimated annular output beam has an output power of at least 100,000 W. In some embodiments, the second collimated annular output beam has an output power of at least 1,000,000 W. In some embodiments, the second collimated annular output beam has an output power of at least 10,000,000 W. In some embodiments, the beam annularizer includes one or more optical elements and an active positioning control subsystem operably connected to one or more of the optical elements to position the beams such that light from all the beams is aligned in the output beam. In some embodiments, the system further includes an astigmatic focusing element configured to reshape the output beam such that a height-to-width ratio of the output beam is substantially one. In some embodiments, the plurality of laser sources includes a plurality of photonic-crystal-fiber (PCF) amplifiers.

In some embodiments, the present invention provides a method for combining a plurality of laser beamlets to form a single annular beam using spectral beam combination. This method includes emitting a plurality of laser beamlets from a plurality of laser sources, wherein each one of the plurality of beamlets has a different wavelength; annularizing each of the plurality of beamlets to convert each beamlet into a respective annular beam each having an annular cross-sectional power profile; pointing each respective one of the plurality of annular beams in a angularly intersecting direction toward a first location; and spectral beam combining the intersecting beams at the first location to combine the light of the plurality of wavelengths in the plurality of annular beams into a first annular spectrally combined beam.

In some embodiments, the first annular combined beam is a collimated beam. In some such embodiments, the method

further includes providing a Cassegrain projector; and receiving the first annular combined collimated beam into the Cassegrain projector, and forming, with the Cassegrain projector, a second collimated annular output beam from the optical energy of the first annular combined collimated beam.

In some embodiments, the first annular spectrally combined beam is a diverging annular beam. In some such embodiments, the method further includes providing a Cassegrain projector; and receiving the first annular combined diverging beam into the Cassegrain projector, and forming, with the Cassegrain projector, a second collimated annular output beam from the optical energy of the first annular combined diverging beam.

In some embodiments of the method, the plurality of laser sources includes a plurality of optical-fiber lasers. In some embodiments, the plurality of laser sources includes about one-hundred (100) laser fibers arranged in a one-dimensional linear array. In some embodiments, each one of the plurality of laser sources has an optical linewidth of about 1 nm. In some embodiments, each one of the plurality of laser sources has an optical linewidth of between about 1 GHz and about 50 GHz. In some embodiments, each laser source provides a laser having a power of at least 10,000 W. In some embodiments, the second collimated annular output beam has an output power of at least 10,000 W. In some embodiments, the second collimated annular output beam has an output power of at least 100 KW. In some embodiments, the second collimated annular output beam has an output power of at least 1 MW. In some embodiments, the second collimated annular output beam has an output power of at least 10 MW. In some embodiments, the method further includes actively positioning one or more optical elements to position the plurality of annular beams such that light from all the annular beams is aligned in the first annular combined collimated beam. In some embodiments, the method further includes astigmatically reshaping the plurality of annular intersecting beams such that a height-to-width ratio of the first annular combined collimated beam is substantially one. In some embodiments, the plurality of laser sources includes a plurality of photonic-crystal-fiber (PCF) amplifiers.

In some embodiments, the method further includes providing a vehicle having an enclosure; supplying electrical power; using the electrical power, controlling and powering the pump sources for the plurality of optical-fiber lasers; and controlling an output direction of the output beam in one of a plurality of different possible directions relative to the vehicle.

In some embodiments, the method further includes providing a vehicle having an enclosure; supplying electrical power from the vehicle; using the electrical power to control and power the plurality of laser sources; providing a Cassegrain projector mounted to the vehicle; receiving the first annular spectrally combined beam into the Cassegrain projector, and forming, with the Cassegrain projector, a collimated second annular output beam from the optical energy of the first annular combined beam; and controlling an output direction of the second annular output beam in one of a plurality of different possible directions relative to the vehicle.

In some embodiments, the present invention provides a system for combining a plurality of laser beamlets to form a single annular beam using spectral beam combination. The system includes means for emitting a plurality of laser beamlets, wherein each one of the plurality of beamlets has a different wavelength; means for annularizing each of the plurality of beamlets to convert each beamlet into a respective annular beam each having an annular cross-sectional power profile; means for pointing each respective one of the plurality of annular beams in a angularly intersecting direction toward a first location; and means for spectral beam combining the intersecting beams at the first location to combine the light of the plurality of wavelengths in the plurality of annular beams into a first annular spectrally combined beam.

In some embodiments, the system further includes means for astigmatically reshaping the plurality of annular intersecting beams such that a height-to-width ratio of the first annular combined collimated beam is substantially one. In some embodiments, the means for astigmatically reshaping the plurality of annular intersecting beams includes an astigmatic lens (a lens where rays that propagate in two perpendicular planes through the lens have different foci) for each of a plurality of the fiber beamlets (e.g., **75** or **76** or **77** of FIG. **2**C). In some embodiments, the means for astigmatically reshaping the plurality of annular intersecting beams includes an astigmatic conical element (a conical element having a cross-section in a direction perpendicular to the direction of propagation that is a non-circular oval) for each of a plurality of the fiber beamlets. In some embodiments, the means for astigmatically reshaping the plurality of annular intersecting beams includes an astigmatic grating (a holographic or diffractive beam-shaping element where rays that propagate in two perpendicular planes through the lens have different foci) for each of a plurality of the fiber beamlets.

In some embodiments, the first annular combined beam is a collimated beam. In some such embodiments, the system further includes a Cassegrain projector; and means for receiving the first annular combined collimated beam into the Cassegrain projector, and for forming, with the Cassegrain projector, a second collimated annular output beam from the optical energy of the first annular combined collimated beam.

In some embodiments, the first annular spectrally combined beam is a diverging annular beam. In some such embodiments, the system further includes a Cassegrain projector; and means for receiving the first annular combined diverging beam into the Cassegrain projector, and for forming, with the Cassegrain projector, a second collimated annular output beam from the optical energy of the first annular combined diverging beam.

In some embodiments, the plurality of laser sources includes a plurality of optical-fiber lasers. In some embodiments, the means for emitting a plurality of laser beamlets includes about one-hundred (100) laser fibers arranged in a one-dimensional linear array. In some embodiments, each one of the means for emitting the plurality of laser beamlets has an optical linewidth of about 1 nm. In some embodiments, the second collimated annular output beam has an output power of at least 10,000 W. In some embodiments, the system further includes means for actively positioning one or more optical elements to position the plurality of annular beams such that light from all the annular beams is aligned in the first annular combined collimated beam. In some embodiments, the means for emitting a plurality of laser beamlets includes a plurality of photonic-crystal-fiber (PCF) amplifiers.

In some embodiments, the system further includes a vehicle having an enclosure; means for supplying electrical power from the vehicle; means for controlling and powering the means for emitting the plurality of laser beamlets; a Cassegrain projector mounted to the vehicle; means for receiving the first annular spectrally combined beam into the

Cassegrain projector, and for forming, with the Cassegrain projector, a collimated second annular output beam from the optical energy of the first annular combined beam; and means for controlling an output direction of the second annular output beam in one of a plurality of different possible directions relative to the vehicle.

It is to be understood that some or all of the embodiments in the above description (including embodiments described in the patents and patent applications that are incorporated herein by reference) are intended to be combined with and/or to use apparatus, structures and/or methods that are described in one or more other of the embodiments described herein. Unless otherwise explicitly stated, none of the embodiments is to be considered to require all of the elements described for that respective embodiment. It is to be further understood that at least some of the embodiments in the above description (or subsets thereof) are intended to be combined with or to use apparatus, structures and/or methods that are described in the patents and patent applications listed herein, each of which is incorporated herein by reference for all purposes.

It is to be understood that the above description is intended to be illustrative, and not restrictive. Although numerous characteristics and advantages of various embodiments as described herein have been set forth in the foregoing description, together with details of the structure and function of various embodiments, many other embodiments and changes to details will be apparent to those of skill in the art upon reviewing the above description. The scope of the invention should be, therefore, determined with reference to the appended claims, along with the full scope of equivalents to which such claims are entitled. In the appended claims, the terms "including" and "in which" are used as the plain-English equivalents of the respective terms "comprising" and "wherein," respectively. Moreover, the terms "first, " "second," and "third," etc., are used merely as labels, and are not intended to impose numerical requirements on their objects.

What is claimed is:

1. A system for combining a plurality of laser beamlets to form a single annular beam using beam combination, the system comprising:

a plurality of laser sources that emit a plurality of beamlets, wherein each one of the plurality of beamlets has one of a plurality of different wavelengths;

a beam annularizer that includes a plurality of optical units arranged to receive the plurality of beamlets, and configured to convert each beamlet into a respective one of a first plurality of annular beams that each has an annular cross-sectional power profile; and

a beam combiner configured to receive all of the first plurality of annular beams and to combine the first plurality of annular beams into a first annular combined beam.

2. The system of claim **1**, wherein the plurality of laser sources includes a plurality of optical-fiber lasers, wherein the plurality of optical units includes a plurality of fiber termination units, wherein each one of the plurality of fiber termination units is connected to a respective one of the plurality of optical-fiber lasers, and wherein each one of the plurality of fiber termination units includes a graded-index (GRIN) fiber element.

3. The system of claim **1**, wherein the plurality of laser sources includes a plurality of optical-fiber lasers, wherein the plurality of optical units includes a plurality of fiber termination units, wherein each one of the plurality of fiber termination units is connected to a respective one of the plurality of optical-fiber lasers, and wherein each one of the plurality of fiber termination units includes an axicon.

4. The system of claim **1**, wherein the plurality of laser sources includes a plurality of optical-fiber lasers, wherein the plurality of optical units includes a plurality of hollow endcaps, wherein each one of the plurality of hollow endcaps is connected to a respective one of the plurality of optical-fiber lasers, and wherein each one of the plurality of hollow endcaps includes an axicon.

5. The system of claim **1**, wherein the plurality of laser sources includes a plurality of optical-fiber lasers, wherein the plurality of optical units includes a plurality of fiber termination units and a plurality of axicons, wherein each one of the plurality of fiber termination units is connected to a respective one of the plurality of optical-fiber lasers, wherein each one of the plurality of fiber termination units includes a GRIN fiber element, and wherein each one of the plurality of axicons is configured to receive a beamlet of the plurality of beamlets from a respective one of the plurality of fiber termination units.

6. The system of claim **1**, wherein the plurality of optical units includes a plurality of smoothed helical phase plates.

7. The system of claim **1**, wherein the plurality of laser sources includes a plurality of optical-fiber lasers, wherein the plurality of optical units includes a plurality of smoothed spiral phase plates, the system further comprising:

a transparent base plate having an input surface and an output surface, wherein the plurality of optical-fiber lasers are attached to the input surface of the transparent base plate, and wherein the plurality of smoothed spiral phase plates is attached to the output surface of the transparent base plate.

8. The system of claim **1**, wherein the plurality of laser sources includes a plurality of optical-fiber lasers, each optical-fiber laser having an input end and an output end, wherein each respective one of the plurality of optical-fiber lasers includes a GRIN lens section coupled to the output end of the respective optical-fiber laser, wherein the plurality of optical units includes a plurality of axicons, the system further comprising:

a transparent base plate having an input surface and an output surface, wherein the GRIN lens section of each respective one of the plurality of optical-fiber lasers is attached to the input surface of the transparent base plate, and wherein the plurality of axicons is attached to the output surface of the transparent base plate.

9. The system of claim **1**, wherein the plurality of laser sources includes a plurality of optical-fiber lasers, wherein the plurality of optical units includes a plurality of holographic annularizing optics, the system further comprising:

a transparent base plate having an input surface and a concave-shaped output surface, wherein the plurality of optical-fiber lasers are attached to the input surface of the transparent base plate, and wherein the plurality of holographic annularizing optics is attached to the concave-shaped output surface of the transparent base plate.

10. A method for combining a plurality of laser beamlets to form a single annular beam using beam combination, the method comprising:

emitting a plurality of laser beamlets, wherein each one of the plurality of beamlets has a different wavelength;

annularizing each respective one of the plurality of beamlets into a respective one of a first plurality of annular beams that each has an annular cross-sectional power profile; and

receiving and beam combining the first plurality of annular beams into a first annular combined beam.

11. The method of claim **10**, wherein the emitting of the plurality of laser beamlets includes emitting the plurality of laser beamlets from a plurality of optical-fiber lasers, wherein the annularizing further includes:

providing a plurality of fiber termination units, wherein each one of the plurality of fiber termination units includes a graded-index (GRIN) fiber element; and

connecting each one of the plurality of fiber termination units to a respective one of the plurality of optical-fiber lasers.

12. The method of claim **10**, wherein the emitting of the plurality of laser beamlets includes emitting the plurality of laser beamlets from a plurality of optical-fiber lasers, wherein the annularizing further includes:

providing a plurality of fiber termination units, wherein each one of the plurality of fiber termination units includes an axicon; and

connecting each one of the plurality of fiber termination units to a respective one of the plurality of optical-fiber lasers.

13. The method of claim **10**, wherein the emitting of the plurality of laser beamlets includes emitting the plurality of laser beamlets from a plurality of optical-fiber lasers, wherein the annularizing further includes:

providing a plurality of fiber termination units, wherein each one of the plurality of fiber termination units includes a GRIN fiber element;

connecting each one of the plurality of fiber termination units to a respective one of the plurality of optical-fiber lasers;

providing a plurality of axicons; and

optically coupling each one of the plurality of axicons to receive a beamlet of the plurality of beamlets from a respective one of the plurality of fiber termination units.

14. The method of claim **10**, wherein the emitting of the plurality of laser beamlets includes emitting the plurality of laser beamlets from a plurality of optical-fiber lasers, wherein the annularizing further includes:

providing a transparent base plate having an input surface and an output surface;

providing a plurality of smoothed spiral phase plates;

attaching the plurality of optical-fiber lasers to the input surface of the transparent base plate; and

attaching the plurality of smoothed spiral phase plates to the output surface of the transparent base plate.

15. The method of claim **14**, wherein the providing of each respective one of the plurality of smoothed spiral phase plates includes:

forming a plurality of smoothed spiral phase plate areas as adjacent surface formations on a single substrate.

16. The method of claim **14**, wherein the attaching of the plurality of optical-fiber lasers to the input surface includes fusing the plurality of optical-fiber lasers to the input surface.

17. The method of claim **10**, wherein the emitting of the plurality of laser beamlets includes emitting the plurality of laser beamlets from a plurality of optical-fiber lasers, each optical-fiber laser having an input end and an output end, wherein the annularizing further includes:

providing a plurality of GRIN lens sections;

coupling each respective one of the plurality of optical-fiber lasers to a respective GRIN lens section of the plurality of GRIN lens sections;

providing a transparent base plate having an input surface and an output surface;

providing a plurality of axicons;

attaching the GRIN lens section of each respective one of the plurality of optical-fiber lasers to the input surface of the transparent base plate; and

attaching the plurality of axicons to the output surface of the transparent base plate.

18. The method of claim **10**, wherein the plurality of laser sources includes a plurality of optical-fiber lasers, wherein the annularizing further includes:

providing a plurality of holographic annularizing optics;

providing a transparent base plate having an input surface and a concave-shaped output surface;

attaching the plurality of optical-fiber lasers to the input surface of the transparent base plate; and

attaching the plurality of holographic annularizing optics to the concave-shaped output surface of the transparent base plate.

19. A system for combining a plurality of laser beamlets to form a single annular beam using beam combination, the system comprising:

means for emitting a plurality of laser beamlets, wherein each one of the plurality of beamlets has a different wavelength;

means for annularizing each respective one of the plurality of beamlets into a respective one of a first plurality of annular beams that each has an annular cross-sectional power profile; and

means for receiving and beam combining the first plurality of annular beams into a first annular combined beam.

20. The system of claim **19**, further comprising:

a mobile vehicle;

an electrical power supply mounted to the vehicle;

a laser controller mounted to the vehicle and operatively coupled to receive electrical power from the electrical power supply and operably coupled to power and control the plurality of laser sources;

a Cassegrain projector mounted to the vehicle and operatively coupled to receive the first annular combined beam and configured to form a collimated second annular output beam from the optical energy of the first annular combined beam; and

a beam-direction controller operably coupled to the Cassegrain projector and operable to direct the second annular output beam in one of a plurality of different possible directions relative to the vehicle.

* * * * *